YZ20T4
OPERATION MICROSCOPE
INSTRUCTION MANUAL

66 VISION TECH CO., LTD.

THE PEOPLE'S REPUBLIC OF CHINA

Preface

Thank you for purchasing our YZ20T4 Operation Microscope. Please read this instruction carefully for the sake of your better use.

General Requirement for Safety

Please read carefully about following precautions to avoid unexpected personal injury as well as the product being damaged and other possible dangers.

Precautions

1. Do not use this instrument in the environment where is prone to fire and to blast or where there is much dust and high temperature. Use it in the room and simultaneously be careful to keep it clear and dry.
2. Check that all the wires are correctly and firmly connected before use. Ensure that the instrument is well grounded.
3. Please pay attention to all the rating of the electrical connecting terminal.
4. Please only use fuse according to the specifications and rated stipulated by our product.
5. Use the power cable supplied with this instrument.
6. Don’t touch the surface of the lens and prism with hand or hard objects.
7. Turn off the main power first before replacing the main bulb and fuse.
8. To prevent the instrument from falling down to floor, it should be placed on the floor where the inclination angle is less than 10°.
9. Turn off the power and cover the instrument with dustproof cover when it is not in use.
10. In case there is any trouble, please first refer to the trouble-shooting guide. If it still can’t work, please make contact with the authorized distributor or our Repair Department.

THE SAFETY MARKS USED IN THIS INSTRUMENT

TYPE B

ATTENTION

TERMINAL OF THE PROTECTIVE GROUNDING

SEPARATE COLLECTION

UPWARD

CAUTION PLACE

AVIOD DAMP

SCALD WARNING

Contents

1 Features and Specifications

1.1 Features

YZ20T4 Operation Microscope is a kind of the same light-way Operation Microscope for two persons and double eyes. It ensures the same stereo effect that the doctor and the assistant observe. The main microscope has five-step magnifications and the assistant microscope has three-step magnifications. The assistant microscope can be locked at 90° to the left or the right of the main scope. Taking off the oblique illumination device, the assistant microscope can be locked at 180° to the left or the right of the main scope.

The system adopts the cold light source which won't do damages to the tissue. The illumination is sufficient and symmetrical. According to the characters of ophthalmic operation, the illumination system is equipped with retina protecting device, red reflex intensifier, filter of infrared and as well as ultraviolet ray.

The instrument is equipped with push-way splitter light system which can split light, teach, take photograph and video.

The instrument adjusting functions include magnifying, focusing, horizontally removing, pitching and inclining in which magnifying, focusing and horizontally removing can be controlled by foot switch.

This instrument is available and flexible for ophthalmic operation, neurosurgery and embedding the broken limbs, etc. **No use contraindication.**

Environment for use temperature: +5 ℃ ~+40 ℃ . Relative Humidity: 30%~75%. Atmospheric Pressure: 700hPa~1060hPa.

1.2 Specifications

1. Main microscope and assistant microscope

Big objective focus	f=200mm, 250mm,300mm
Magnification of eyepiece	12.5×/18B

Magnification and visual field

Focus of the objective	Total magnification (main)	Total magnification (assistant)	Diameter of visual field(mm)	Diameter of light spot(mm)
f200	4×		58	50
	6×	6×	38	
	10×	10×	23	
	16×	16×	14	
	25×		9	

f250	3.2×		72	62
	5×	5×	46	
	8×	8×	29	
	12.8×	12.8×	18	
	20×		12	
f300	2.7×		87	75
	4.2×	4.2×	55	
	6.7×	6.7×	34	
	11×	11×	22	
	17×		14	

2. Working distance

Working distance 190mm 240mm 290mm

3. Eyepiece tube

Visual angle of eyepiece tube of main scope 45°

Visual angle of eyepiece tube of assistant lens 45°

The adjustable range of diopter ±5D

The adjustable range of pupil distance 55mm~75mm

The height of eyepiece cover 18mm

Revolving angle of assistant eyepiece 180°

4. Illumination

The view-field illumination is conducted by 0° cold light source coaxial illumination and 25° oblique illumination. The oblique illumination can be used for slit illumination. The slit width can be adjusted and the slit angle can be rotated in 360° .

Maximum illumination of the coaxial illumination ⩾30000LX

25° oblique illumination field φ 35mm

Maximum illumination of the oblique illumination ⩾15000LX

5. Position adjustment

Maximum stretch radius of microscope arm 1040mm

Vertical movement range (from floor to objective) 850mm~1350mm

Focusing distance ⩾50mm

Focusing speed ⩽2mm/s

Moving range of X-Y device 50mm×50mm

Moving speed of X-Y device ⩽2mm/s

6. Electric

Input voltage	AC220V＋10%/50Hz±1Hz AC110V＋10%/60Hz±1Hz
Input power	330VA
Fuse	125V T8.0A (51S-080L) 250V T4.0A (51S-040H)
Bulb	12V/100W cold-reflex halogen lamp
Electrical safety	executive standard IEC601-1, Type B, Sort I

2 Names and Uses of Parts

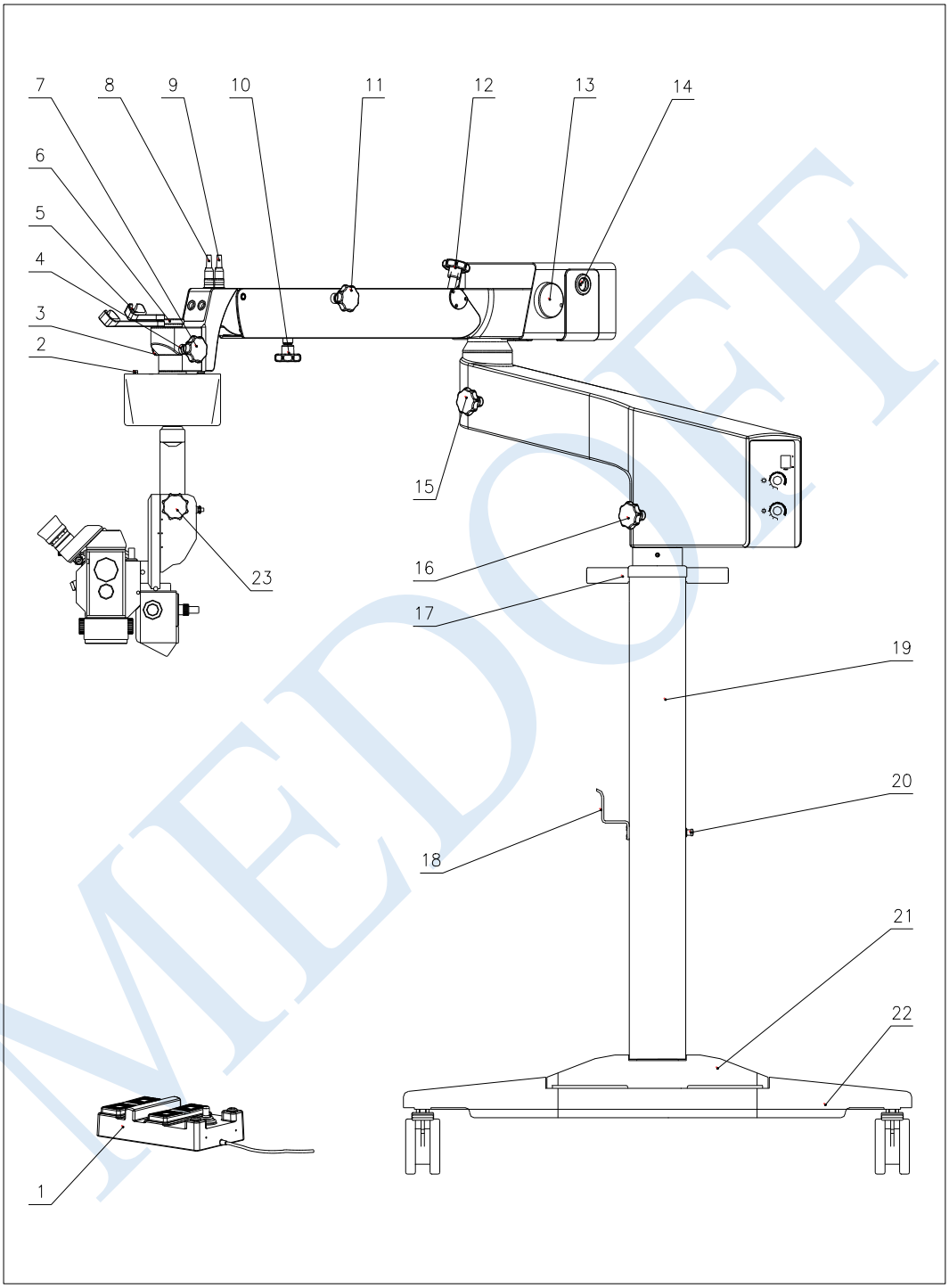

Fig.1

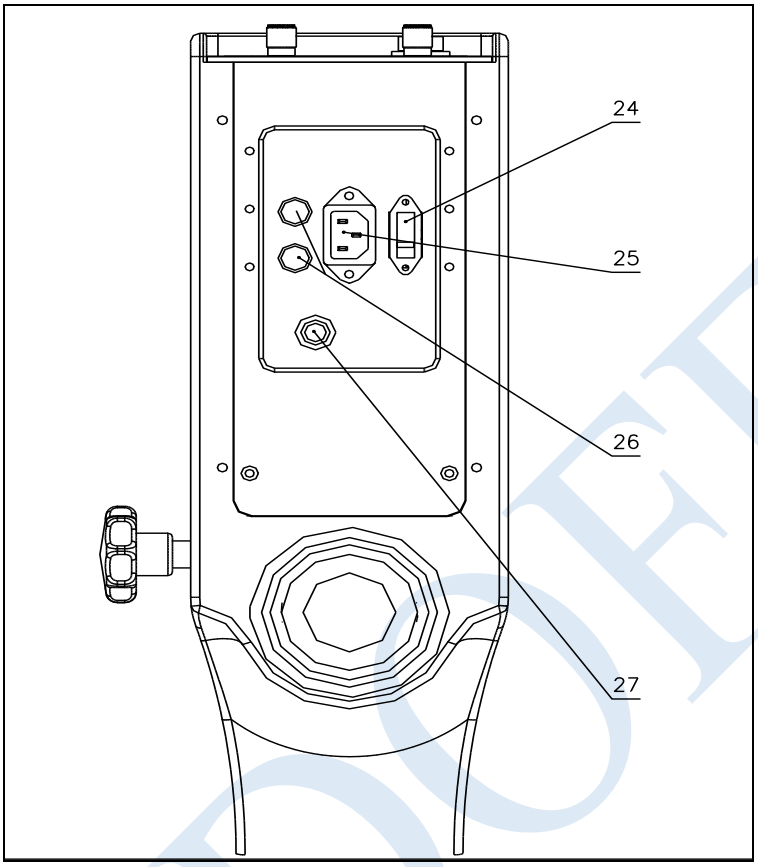

Fig.2

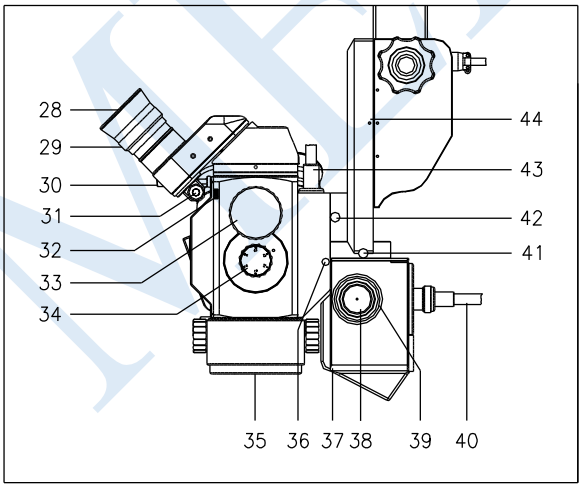

Fig.3

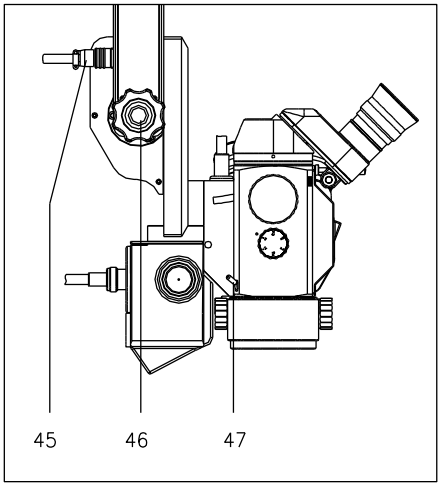

Fig.4

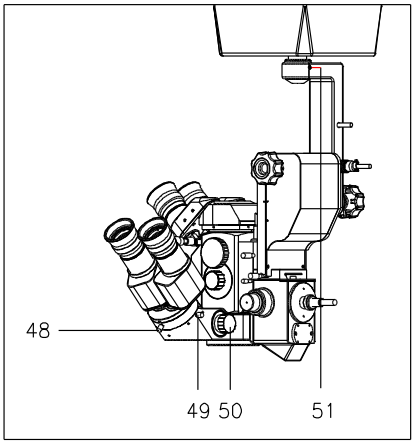

Fig.5

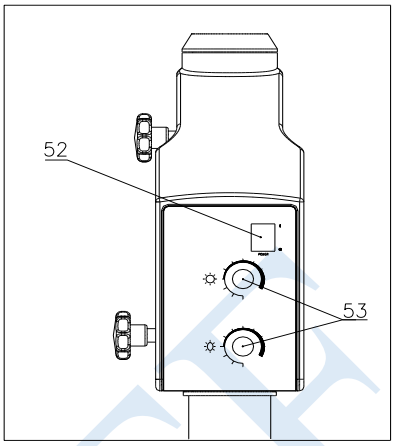

Fig.6

[1] Foot control switch

To control magnification, focusing, horizontal movement and illumination switch.

[2] Fiber optics socket

[3] Reset button

Press the button to make the X-Y coordinate moving device return back to the center position.

[4] Locking pin

When the instrument is assembled or disassembled, please pay attention to the relative flexible screws in order to avoid the falling of the microscope.

[5] Rotating connector

Used to limit the roomage position of the fiber optics.The guiding fiber optics thread through the small arm and the hole of rotating connector.

[6] Fixation nut

Hang the microscope on the small arm with the nut. The nut must be periodically checked even if there is locking pin.

[7] Star-like fixation handwheel (sterile cover)

To lock the angle between microscope with X-Y coordinate device and the hanging axis.

[8] 8 core plug/socket

The control line connector for focusing and magnification.

[9] 7 core plug/socket

The control line connector of the X-Y coordinate device.

[10] confining handwheel below the small arm

Rotate this handwheel and adjust the perpendicularity position of microscope to limit the minunum position of small arm.

[11] starlike fixation handwheel (sterile cover)

Rotate this screw dessil to lock the big arm. avoiding microscope to move up and down.

[12] balance adjustment knob

Rotate this knob and adjust the moving balance of small arm afresh at uprightness orientation when adding or taking down the accessory of microscope.

⚠ **Attention: Before adjusting the balance adjustment knob, push the small arm to tiptop. At the moment, the rotating adjustment resistance of balance adjustment knob is minimum.**

[13] illumination bulb conversion handle

If the bulb has been turned off during the operation, rotate the handle to replace the bulb.

[14] side door handle

Pull it down to open the side door, and replace bulb.

[15] starlike fixation handwheel (sterile cover)

The handwheel is used to lock the small arm to keep the small arm and big arm at relative immobile position.

[16] star handwheel fixation screw(sterile cover)

Rotate this screw dessil to lock the big arm.

[17] removing handle

Hold the handle with two hands when moving the instrument.

[18] electrical wire hitching nail

When moving or placing the instrument, the electrical wire can be hitched on the hitching nail.

[19] column

[20] foot control hitching nail

When moving or placing the instrument, the foot control switch can be hitched on the hitching nail.

[21] heavy block

[22] base

To support and fix the column.

[23] pitching adjusted handle

Rotate this handle to make the main light axle of the microscope pitching up and down, then the observation angle will be changed.

[24] 110/220V switch

[25] power socket

[26] fuse tube

[27] foot control switch socket

[28] eyecover

Used to adjust the pupil distance. The eyecover can be taken off of curled up. Its height is 18mm.

[29] diopter adjustment hoop

Turn the hoop around to adjust the eyepiece diopter ranging from –6D to +6D.

[30] fixation screw of main eyepiece tube

For the fixation of the main eyepiece tube. At ordinary times, never loosen the screw to

avoid the eyepiece tube falling.

[31] pupil distance adjustment knob (sterile cover)

To adjust pupil distance which can be adjusted continually from 50mm to 70mm.

[32] beam splitter lever

Push it left or right to switch the beam splitter's working state. Push it left, 'IN' will be shown and the beam splitter will cut in the light-way to work. Push it right, 'OUT' will be shown and the beam splitter will be out from the light-way to not work.

⚠ **Attention: If the devices such as CCD are not used, the beam splitter should be out from the light-way.**

[33] dust-proof cover

Before fixing the devices such as CCD, envelop the light-out hole of the beam splitter to prevent the dusts.

[34] main lens magnifying knob

Five magnifications correspond with different magnifications of big object lens with different focuses. Rotating this knob could switch the main lens' magnification.

[35] big object lens

Rotate the big object lens seat anticlockwise to take off the big object lens. According to the need, there are different focuses big object lens, 200mm, 250mm, and 300mm.

[36] macula patch rotating knob

Rotate this knob deasil to let the macula patch cat in. Rotate it anticlockwise to let the macula patch be out.

[37] main body of the oblique illumination

[38] adjustment knob of the slit width

Rotate this knob to adjust the oblique illumination's slit width.

[39] adjustment knob of the slit circumgyration

Rotate this knob to make the illumination -slit in the illumination field circumgyrate around the oblique illumination facular center in 360°.

[40] oblique illumination fiber optics

Lead the illumination fiber optics to the operation position.

[41] fixation screw of the oblique illumination main body

Loosen this screw to change the insert-depth of the oblique illumination main body coattail block. Then adjust the position of the oblique illumination facular center point. The screw can't be loosened at ordinary time.

[42] fixation screw of main body

Used to fix the main eyepiece tube. The screw can't be loosened at ordinary time avoiding the main eyepiece tube falling and being danged.

[43] coaxial illumination fiber optics

Lead the illumination fiber optics to the operation position.

[44] smart focus sign of main body

Indicate the relative position of the smart focus sign board. Before rude focus, adjust the smart focus sign board to make the sign be at the center.

[45] 4 core plug/socket

It is the control line connector of magnification.

[46] adjustment handwheel of the microscope

It is used to adjust the microscope's position.

[47] locking pin lever

It is used to make the assistant microscope locked at 90° to the left or the right of the main scope. Push the lever, the assistant lens revolving in vertical at angle of ±90°. When the assistant lens has return back to the angle of 90° to the main scope, locking pin spring to orient scoket and lock the assistant lens. If taking off the oblique illumination main body, the assistant lens could revolve at angle of 360°, and be locked at 180° relativing to the main lens.

[48] fixation screw of assistant eyepiece tube

It is used to fixup the assistant eyepiece tube. At ordinary time, never loosen the screw to avoid the eyepiece tube falling.

[49] roller fixation screw

Loosen the screw to make the eyepiece tube rotate ±30°, so that the doctor can keep a good position when the microscope is moving up and down.

[50] assistant lens magnifying knob (sterile cover)

Three magnifications correspond with different magnifications of big object lens with different focuses. To rotate this knob could switch the assistant lens' magnification.

[51] confining screw

To avoid the focusing device droping or revolving when disassembling the focusing device or the fixation focusing device becomes flexible.

[52] power switch

Control the instrument's power on or off.

[53] illumination adjustment knob

It is used to adjust the brightness continuously.

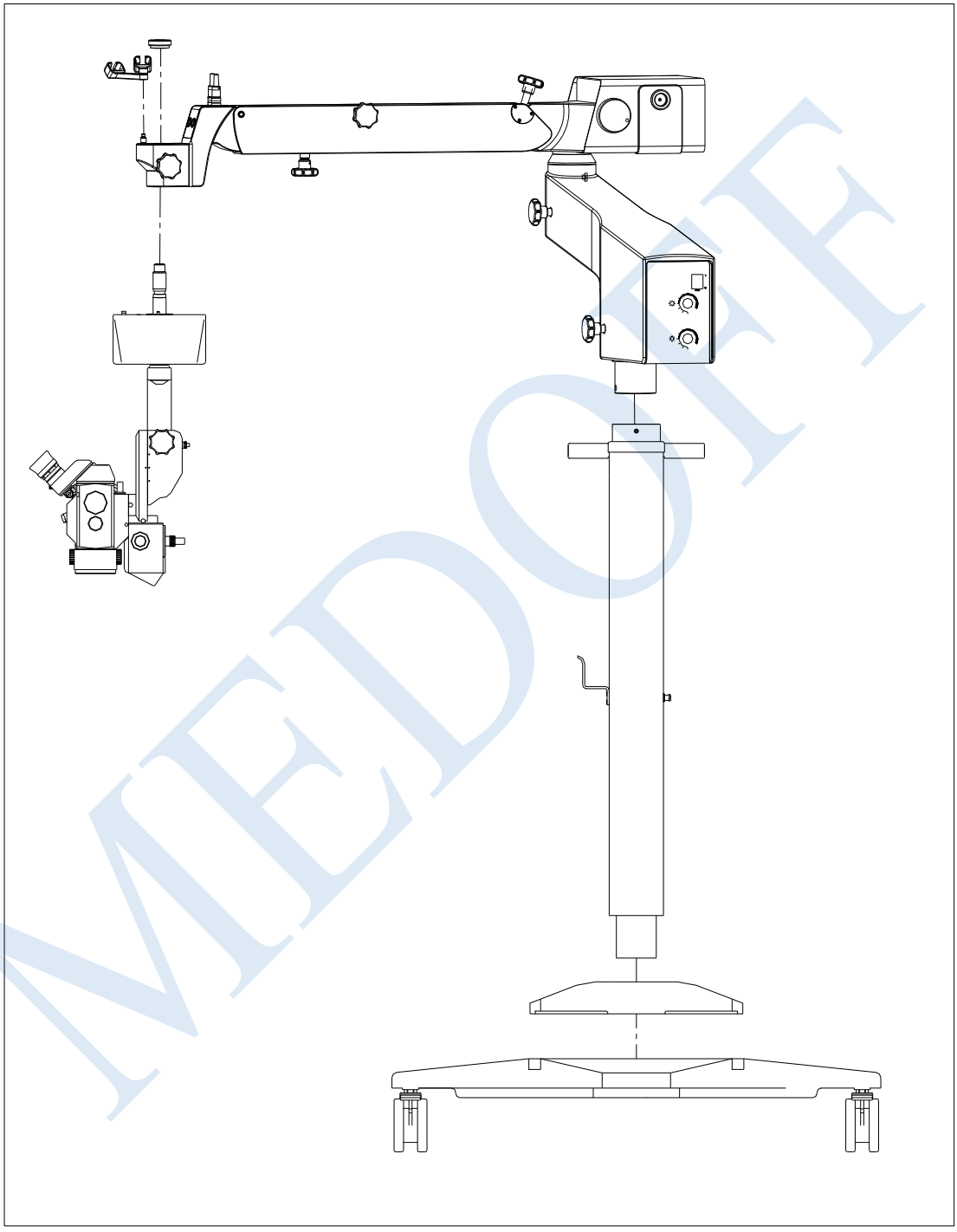

Fig.7

3 Assembly

This equipment may be installed either by user self with reference to the manual or by the service offered by the manufacturer or authorized representatives when real difficulties come.

This equipment is packed in five packages. Please open the package in the direction indicated by the mark on the packages. Take out all the parts and assemble them according to the following procedures:

3.1 Base assembly

Take out the base from the package and lay it on the earth flatly,then take out the heavy block and put it on the base,screw on the hexagon screws and fix the four truckles.

⚠ **Attention: At lease two persons are required for this job due to the heavy weight of the column parts. Gentle handling is a must.**

3.2 Put the column parts on the base

Insert the column parts into the heavy block(there is a locking groove underneath the column parts),rotate the column parts and insert the locking pin on the base into the locking groove,then put the flat gaskets and spring gaskets on the hexagon screws and screw on the hexagon screws taken off anterior from the bottom of the base,tighten them with special spanner into the column parts.Attention:put the flat gaskets then put the spring gaskets.

3.3 Assembling the big arm on the column parts

Take out the big arm from the package and lay it on the column parts,the screws of arm should correspond with the holes of column,then tighten firm four pyramidal hexagon screws with 4 ㎜ hexagon spanner.

3.4 Assembling the X-Y Coordinate Device on the Arm

1. Check out whether the block in the axial hole on the top of the small arm is above the hole. If it is above, just back the starlike fixation wheel[7] for a few steps, so that it may not tower above any more.
2. Rotate down the fixation screw[6] from the hanging axis of the X-Y coordinator.
3. Pull the plug at one end of the cord through the axia hole from bottom to top. And then pull out the security pin[4] with one hand, and insert the hanging axis of the coordinator into the axial hole with the other hand at the same time. Then release the security pin, so that the pin[4] may spring into the groove. After that, put the fixation nut on the plug, and rotate it firm(indicated in Fig.7).
4. Connect the 7 core plug[9] of the control line connector of the X-Y coordinate device to the 7 core socket[9] of the small arm.

3.5 Assembling the Focusing Device on the X-Y Coordinate Device

1. Screw off the pyramidal axis bottom M10×20 hexagon screws with the M10×20 hexagon spanner. Keep them and the gaskets validly.

2. Take out the focusing device and check out whether the confine screws exit from the pyramidal holes. Set the right-angle hitching arm on the pyramidal axis at the bottom of the X-Y coordinate device. The confine screw should aim at the pyramidal axis keyway.

3. Screw the M10×20 hexagon screws taken off anteriorly into the screws on the top of the pyramidal axis. Tighten them with the M8 hexagon wrench. Then tighten the confine screws.

4. Connect the 8-pin plug[8] of the focusing device with the 8-pin socket[8] of the small arm. The groove inside of the plug should correspond with the gap outside of the socket(indicated in Fig.7).

3.6 Assembling the Microscope on the Focusing Device

1. Screw off the fixation screw of main body[42] to make the top of it in to the screw.

2. Take out the main body of the microscope from the package. Press the locking pin lever[47] and adjust the main lens and the assistant lens indicated in Fig.5.

3. Hold the main body with two hands. Fix the mainbody coattail block into the coattail groove in the focusing device. Then tighten the fixation screw of main body[42](indicated in Fig.7).

1. Insert the coaxial illumination fiber optics[43] into the illumination fiber optics holes in the main body. Connect the 4-pin plug[45] with the 4-pin socket of the focusing device. The groove inside of the plug should correspond with the gap outside of the socket.

3.7 Assembling the Oblique Illumination Main Body

1. Screw off the fixation screw of the oblique illumination main body[41] to make the top of it in to the screw.

2. Take out the main body of the oblique illumination[37] from the package. Hold the main body of the oblique illumination with single hand. Fix the mainbody coattail block into the coattail groove in the focusing device(indicated in Fig.7). Then tighten the fixation screw of the oblique illumination main body[41].

3. Insert the oblique illumination fiber optics[40] into the illumination fiber optics holes in the the oblique illumination main body. Tighten the lock-nut of the oblique illumination fiber optics[40] deasil.

3.8 Assembly of the CCD Camera

The CCD camera of this instrument is an optional accessory. If you have ordered this CCD camera device when buying the microscope, you can fix it according to the following procedures.

1. First check the packing case for the CCD device, and it includes the spare parts and tools（see9.）.

2. Select the right side or the left side of the main scope as the assembly position for the

CCD camera just according to the actual requirements. Rotate down the dust-proof cover[33] and place it appropriately.

3. Take out the CCD adapter from the package, and insert it into the beam outlet hole according to the direction displayed in the figure 8, then rotate the screw flange firmly.Rotate down the original camera lens and screw flange of the CCD camera, and place them appropriately. Insert the connector for the camera head into the assembly position and fasten it.

4. Rotate down the original camera lens and screw flange of the CCD camera, and place them appropriately. Insert the connector for the camera head into the assembly position and fasten it.

5. Insert the camera head with the connector into the CCD adapter. Please make sure that the groove of the assembly surface of the connector must target the location pin of the camera head. List the nut and fasten it, then rotate the flange of the camera head.

6. Connect the red wire of the nude end of DC-12V with the positive terminal of the power supply of the CCD camera with a Philips screwdriver, and the black wire with the negative terminal.

7. Rotate the video wire connector around the signal output port of the CCD camera. Plug one end of the 75Ω video wire into the video wire connector, and the other end into the monitor or the Video Import of a video recorder. Turn the power on after the entire configuration has been correctly set. Watch the image on the monitor screen and note the direction of the image. If the image is reversed, just dismantle the CCD camera and mount it again after rotating for 180°.

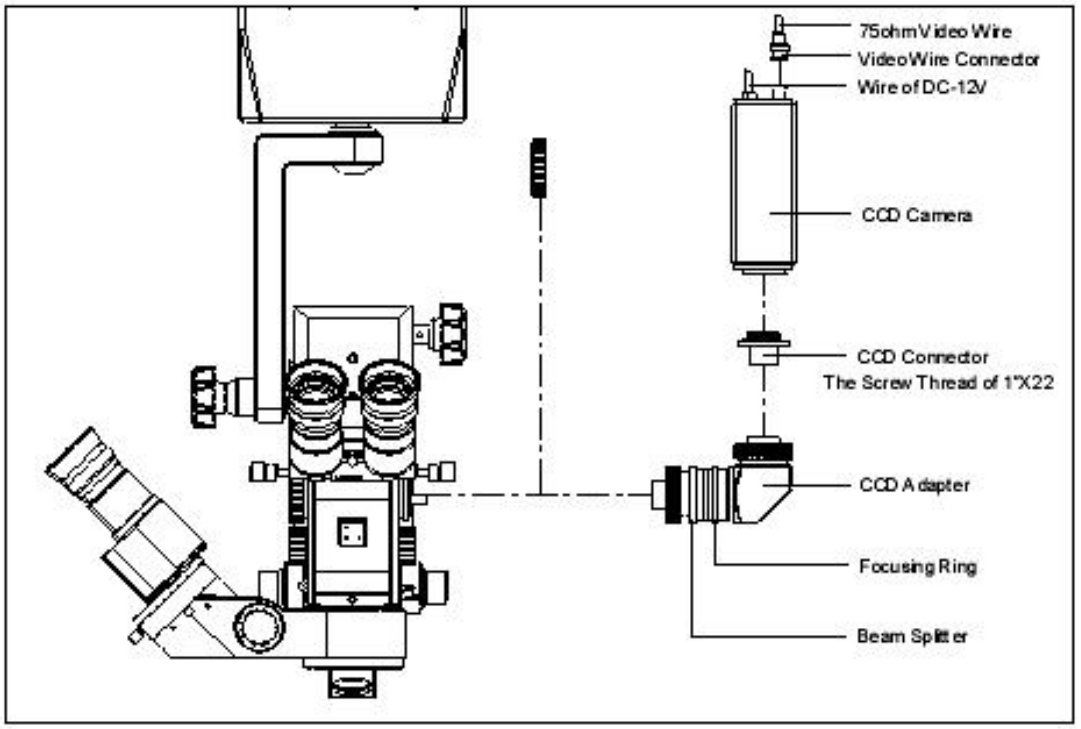

Fig.8

4 Preparation before Using the Instrument

1. Check whether the local power voltage and frequency match the one of this instrument. If not, don't start this instrument.

Attention:Make sure that the local power voltage and frequency correspond with the one of this instrument.

2. Check the grounding and make sure that the instrument is earthed well.

3. This instrument is equipped with a 3-pin power cable, and please select a suitable socket to match it.

Attention: Please use the specical cable, or that complies with IEC227 standard to ensure the instrument's well grounding.

4. The power switch[52] on the faceboard has two states. 'ON' means the power is put through, and 'OFF' means the power is cut out. Before connecting the instrument's electrical wire to the electrical socket, it should be 'OFF'.

5. Insert the plug of the instrument into the local socket. (The electrical socket should be earthed well, another inserts into the socket which is at the bottom of the column panel..

6. Turn on the power switch, and the switch may give out green light. Watch the illumination light of the instrument to confirm that the instrument illuminates normally.

7. The switch on the blue plate should be turned off after the above check. Extract the plug and cover the instrument with the dust-proof shroud.

5 Use of the Instrument

5.1 Use of the Foot Control Switch

1. Connect the cable plug of the foot control switch to the socket[4] at the bottom of the column pane[27]. The gap of the plug should correspond with the protuberant direction inside of the socket. Put through the power and turn on the switch[52], then the instrument could be normally used.

2. The two touch points are useless.

3. When fine focusing, step down the focusing switches on the up side of the foot switch's crossbeam. Step down the left focusing switch, and the microscope may move upwards; step down the right focusing switch, and the microscope may move downwards.

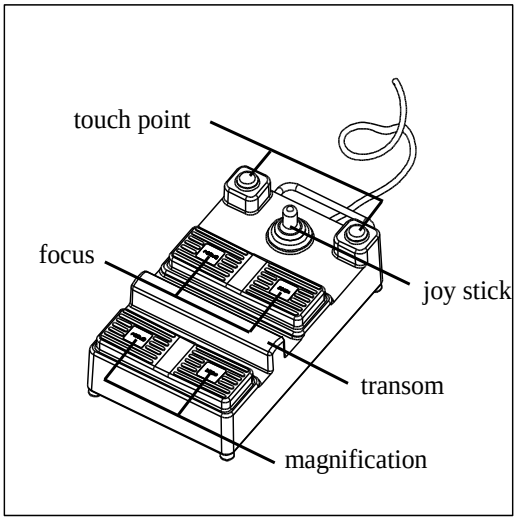

Fig.9

4. When changing magnification of the microscope, the knob of changing magnification of the microscope must be rotated to the appropriate position. Step down the magnification switches

on the down side of the foot switch's crossbeam. Step down the right magnification switch, and the magnification may decrease; step down the left one, and the magnification may increase. Five magnification will be changed circularly if the switch is stepped down time and again.

5. During the operation, if it needs to change the operation position so that it could be seen through the microscope, just adjust the X-Y coordinator's horizontal position. Manipulate the Direction stick on the foot switch with the foot, and the microscope's vision field may move relatively according to the Stick's forward, backward, right, left forward, right forward, left backward, right backward movements. The directions of vision field movement and Stick's movement are the same (indicated in fig.9).

5.2 Setting and Adjustment before Using

1. Make sure the distance the operation needs. According to the working distance, the big object lens' focus should be 200mm, 250mm or 300mm.

Rotate the big object lens' seat withershins when changing the big object lens. The big object should be placed appropriately. Select the right big object lens and screw on the main lens carefully. The big object lens' fixing surface should joint the main lens' fixing surface.

2. Adjust the balance of the small arm. Screw the star fixation handwheel [11] which is on the small arm.. If the small arm spring upwards, rotate clockwise the balance adjustment knob to add the damping of downwards move. If the small arm moves upwards, rotate clockwise the balance adjustment knob to add the damping of upwards move. Until the small arm damping of downwards move accord with the damping of upwards move. Adjusted microscope should stay at the rude focus position of ±20° relative to horizontal line

3. To prevent the medical accident, as prevent microscope fall off suddenly during the operation.The minimum moving position of microscope on the perpendicular direction should be limited according to the need of the operating table and operation.When you adjust it, screw the star fixation handwheel [10],and fix the microscope to the actual height. The end screw down the hand wheel clockwise direction.

4. Put through the power, and check whether the bulb has been burned bad.

⚠ **Attention: The invalid bulb must be replaced before operation to ensure the later operation may go on smoothly.**

5. All the sterile covers must be sterilized before use.

6. Set the assistant lens' position. The assistant lens can be placed either at the left side or right side of the main microscope, indicated in Fig.10. If you want to change the position of the assistant lens, first press the locking pin lever [47] downwards, then rotate the assistant lens. After the assistant lens are divorced from the orientation, release the locking pin lever after the assistant lens moves a small angle and continue to rotate the assistant lens until the locking pin clicks into the location.

7. If it is needed that the doctor has to face the assistant, then adjust the assistant lens to the position of 180° relative to the main lens(indicated in Fig.11).

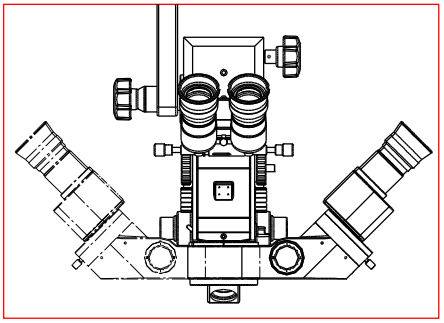

Fig.10

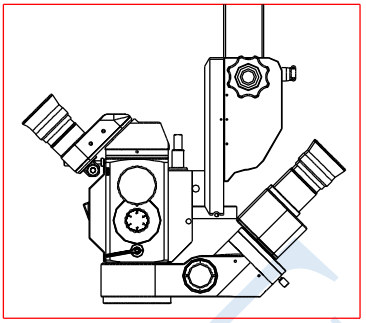

Fig.11

8. Screw off the lock cover of the oblique illumination fiber optics[40] firstly. Tie the oblique illumination fiber optics[40] with the small arm to avoid interferer. Then loosen the fixation screw of the oblique illumination main body[41] withershins. Hold the main body of the main lens with one hand and hold the oblique illumination fiber optics with the other hand. Slide the main body of the oblique illumination[37] out from the fixed coattail groove. Place the oblique illumination[37] appropriately.

9. Press the locking pin lever [47] downwards, then rotate the assistant lens. After the assistant lens are divorced from the orientation, release the locking pin lever[47] after the assistant lens moves a small angle and continue to rotate the assistant lens until the locking pin clicks into the location.

5.3 Adjustment during Using

1. Move the instrument to a proper place. Step on the two orientation skid to avoid possible slipping.

2. Move the foot control switch[1] to a proper place. Connect the cable plug of the foot control switch to the socket at the bottom of the column panel.

3. Insert the power supply wire plug on the panel of column into the power socket, then turn on the power switch[52].

4. Use the foot control to adjust the initiative position of the focusing board fine, so that the smart focus sign of main body[44] will point to the center mark.

5. Adjust the brightness of the operation surface. Rotate the illumination adjustment knob[53] on the adjustment panel. Rotate it clockwise to increase the brightness, rotate it withershins to decrease the brightness. The brightness is according to operation’s need.

6. Adjust the focus roughly. Loosen the starlike fixation handwheel[11], [15], [16]. Then hold the adjustment handwheel of the microscope[46] and rotate the pitching adjusted handle[27] up-down. Draw the microscope to make operation surface at the center of the light facula. Use the 10 multiples to observe operation surface to ensure the clear imaging.

7. Confirm the revolving angle of the assistant eyepiece. After loosening the roller fixation screw [49], the assistant eyepiece tube can revolve ±30° around the assistant microscope according to different operation requirement.

8. Adjust the eye-cover [28] height. It can reduce the outside light’s interferer to the

observation. Limit the height to 18mm. If the doctor operates with his glasses, convolve the eye-covers[28] and set them on the lens.

9. Adjust the diopter. The eyepiece diopter must be adjusted so that the image is clear both through the main and assistant microscope. The unit of the diopter adjustment hoop[29] is “1D” and the adjustable scope is ±6D. When adjusting, turn the diopter adjustment hoop to the white mark agreeing with the doctor’s diopter. If the doctor does operation with glasses, he could adjust the diopter to the mark “0” because the glasses have calibrated his diopter. After the diopter having been adjusted, fasten the roller fixation screw to avoid possible change. If the assistance still feels the image not clear, continue to adjust the diopter of assistant lens.

10. Adjust the pupil distance. While adjusting the pupil distance of main microscope, turn the pupil distance adjustment knob[31] until you can observe correctly and posses the stereoscopic vision. While adjusting the pupil distance of assistant microscope, hold the assistant eyepiece tube and pull it. If the figure of doctor’s pupil distance has been know, adjust the pupil distance to the figure directly.

⚠ **Attention: All above should be done before sterilization.**

11. Equip the sterile covers at the following parts:

pupil distance adjustment knob [31]
assistant lens magnifying knob[50]
adjustment knob of the slit width[38]
adjustment knob of the slit circumgyration[39]
pitching adjusted handle[27]
adjustment handwheel of the microscope[46]
star handwheel fixation screw[7], [11], [15],[16]

⚠ **Attention: Cover the microscope lens with one-off covers according to the doctor’s request. Then tow the microscope to make the operation position be at the center of light spot.**

12. Adjustment of the microscope illumination and the observation direction.The illumination is qualified with the retina protecting device. Rotate the macula patch rotating knob[36] to cut a macula into the coaxial illumination. There will be a φ 6.8mm macula in the center of the illumination facula .To change the observation direction during the operation, rotate the pitching adjusted handle[31] to make an angle of the microscope’s light-axis prone or supine. Rotating it clockwise is prone(the visual field is close to your body), and rotating it withershins is supine(the visual field is removed).

13. Adjust the focusing. Hold the adjustment handwheel of the microscope[46], pitching adjusted handle [27]. Draw the microscope to focus roughly. Then focus fine with the foot control switch. Indicated in 5.1.3.

14. Assemble the CCD according to the above-mentioned process if it is needed. The CCD device is indicated in Fig.8. Maybe the image in the monitor is not clear, so rotate the focusing loop of the CCD tie-in. If the image is too bright or dark, adjust the aperture adjustment loop of the CCD tie-in. Adjust the focusing loop and the aperture adjustment loop time and again till the best image.

Attention: In case one of the bulbs are burned off in operation, turn off its switch. Turn the bulb conversion dial 90° to make the macula on the dial relative to the 45° macula on the other side of the box. Then turn on the switch to continue operation.

5.4 Removing and storing after using

1. Put the microscope in the nearest place from column. Fasten every star fixation screw to make stretch arm and microscope fixed.
2. Pull out the power plug and wind the power supply wire round the electrical wire pothook[18].
3. Hang the foot control switch[1] on the foot control hitching nail[20].
4. Before moving, step on the skid-release pedal to loosen the orientation skid.
5. While moving the instrument, hold the movement handles[17] and make the instrument move slowly and carefully to avoid falling and bumping. Take off all sterile covers and handles to be sterilized for next operation.
6. Replace the burned bulb for next operation(indicated in 6.1.1).

6 Maintenance

6.1 Replacement of Brittle

Attention: The waste products are dealt as general dust.

6.1.1 Replacement of the spare bulb

The disabled bulb should be replaced in time to make sure the safe repertory of operation. The method is follow:

1. Circumgyrate the change lighting hand wheel, turn to the standby bulb.
2. Pull out the handle of the side entrance[14] . Then pull out the bulb and the ceramic socket from the clamp spring. Separate the ceramic socket and the bulb. Then replace the new bulb as the opposition step.

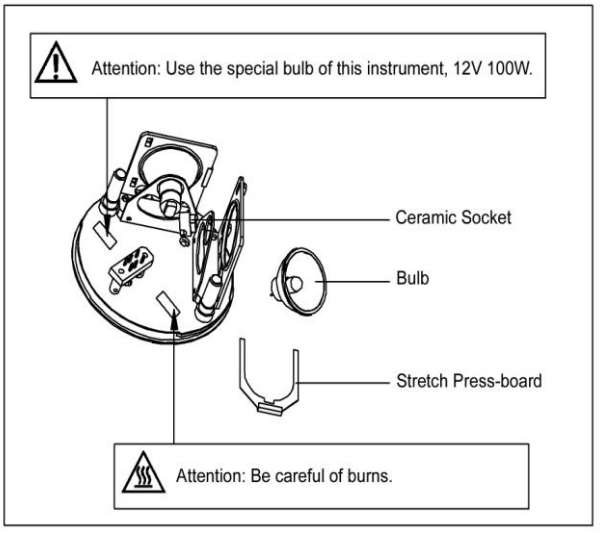

Fig.12

Attention: Be careful of burns. Use the special bulb of this instrument.

6.1.2 Replacement of fuse tube

Attention: Please use the fuses twice with the same type, specification and rating. For the sake of safety, turn off the power switch and pull out the power input line before replacing fuses.

6.2 Cleaning and Antisepsis

We suggest the cleaning-period be once three months or according to requirements.

1. After the instrument had been examined and up to standard, the instrument must be maintained carefully. Unskilled or unqualified users who are not familiar with the structure and function of the instrument should not disassemble it. Otherwise the instrument may be damaged and the quality will not be assured.
2. The instrument should not be placed in a dusty, moist or corrosive environment.
3. Every len should not be disassembled. If there are dusts stained on the lens, blow them with a globe or wipe off them with a dust pen. Creasy or water stains can be cleaned with lens cleaning-paper or liquid solvent (1:1 mixture of alcohol and ether). Be careful to prevent the solvent from infiltrating the edges of lens.
4. The surface can be cleaned by the waterish cloth. Wipe off the hangover with the 50% ethanol and 50% distilled water mixed liquid. Do not use the caustic cleanser.
5. The eyecover can be taken off and cleaned with water. Set it back when it is dry.
6. All the sterile covers must be disinfected in the autoclaver. The commendatory temperature and time: 120℃,20minutes 134℃,5minutes
7. The temporarily needless accessories should be disassembled and put in a closet box packed with moisture-absorber.

6.3 General Guide of Removing Trouble

In case there is any trouble,please first refer to the trouble-shooting guide. If it still can't work,please make contact with the authorized distributor or our After-Sales Service Department.

Phenomena of faults	Probable reason	Guide of removing
The bulb doesn't take effect.	The connection between power lines is not good.	Re-connect the power lines.
	Don't adjust the illumination adjustment knob after turning on the power switch.	Adjust the illumination adjustment knob.
	The plug and the socket of bulb are not well connected.	Take off the bulb. Shave the oxide layer and reassemble the bulb. Fasten the fixation screw on plug pin.
	The bulb has been turned off.	Replacement of the bulb.
	The fuse tube has been melted.	Replacement of the fuse tube.

Light spot is too dim or not even.	The round lamp base was not turned to its limit.	Turn the base to its limit
	Fiber optics was not inserted to the root.	Insert the fiber optics to its root.
The main microscope and the assistant's have not the same focus.	The diopter was not adjusted.	Adjust the diopter of the main microscope and the assistant's.
The footswitch doesn't take effect.	The plug on footswitch and the socket on column are not good connected or the two groups of connecting parts on the small arm are not good connected.	Re-connect them.
The macula is not in the center of visual field.	The macula patch rotating knob[36] is not turned to its limit.	Rotate the macula patch rotating knob[36] clockwise downright.

6.4 Ordering the Brittle

Name	Specification	Recommended type & producer
Cold-reflex Halogen lamp	AC12V/120W	HLX64627 (OSRAM)
Fuse tube	AC125V T8.0A	51S-080L
	AC250 T4.0A	51S-040H

7 Responsibility

According to users' requirements for service, we can provide the circuit diagram and the list of the electric element, etc..

If you need some correlative datum, respective service or you have questions, please contact with us or the dealer authorized.

8 Transport and Storing

During transportation, the relative humidity varies from 10% to 80%, surrounding temperature varies from -40℃ to +50℃ and atmospheric pressure varies from 500hPa to 1060hPa, dampproof, no conversion, no great shakings.

This instrument should be reserved in the room where relative humidity varies from 10% to 80%, surrounding temperature varies from -40℃ to +50℃ and atmospheric pressure various from 500hPa to 1060hPa, no caustic gas and drafty.

Fasten all moveable parts during shot-distance moving and the instrument cannot be inclined exceeding 10℃(indicated in 5.4). If long-distance movement is needed, please move it after re-packing.

If the reservation duration has been over 5 years, please contact with us or the dealer authorized.

Rejection of the instrument should be dealt with according to environments protecting law. Please don't pollute environments.

9 Spare Accessories and Tools

1	F250 big object lens	1pc
2	F300 big object lens	1pc
3	cold reflexation halogen bulbs(12V100W)	2pcs
4	sterile covers for fixation handwheel	5pcs
5	sterile covers for pupil distance adjustment knob	2pcs
6	sterile covers for magnification knob of main microscope	2pcs
7	sterile covers for magnification knob of assistant microscope	2pcs
8	sterile covers for adjustment knob of the slit width	2pcs
9	sterile covers for adjustment knob of the slit circumgyration	2pcs
10	dust pen	1pc
11	4mm inner hexagram screw wrench	1pc
12	8mm inner hexagram screw wrench	1pc
13	Single wrench(gap distance 24)	1pc
14	M20 hexangular bolt single wrench	1pc
15	fuse tubes 125V T8.0A	4pc
16	fuse tubes 250V T4.0A	4pc
17	P54M bulb's socket	2pc
The camera package includes the following optional accessories		
18	CCD	1pc
19	CCD adapter	1pc
20	connector for the camera	1pc
21	DC-12V power line	1pc
22	75Ω video frequency line	1pc
23	video frequency line adapter	1pc
24	cross-groove screw tool	1pc

★ **We will not notice you if the design and specification are changed.**

EC REP Wellkang Ltd t/a Wellkang Tech Consulting,

（Suite B,29 Harley Street
LONDON W1G 9QR
England, United Kingdom）

66 Vision Tech Co., Ltd.
Add: 34 Daru lane, Suzhou,
Jiangsu province P.R.C
Tel: (86)512-67276129
Fax: (86)512-67284889
Cable: 7729
Zip Code: 215005
Web Site: www.66vision.com

124.ZA2.0000.01

YZ20T4 ENCASEMENT LIST

Box	Content	Number	Remark
No.1	Base	1	
No.2	Base balance block	1	
No.3	Focusing device	1	
	Microscope main body	1	
	Oblique illumination	1	
	Fiber optics	2	
	X-Y coordinate device	1	In the same one plastic bag
	F250 big object lens	1	
	F300 big object lens	1	
	Cold reflected iatrical halogen-tungsten bulb(12V 100w)	2	
	Sterile cover of fixation handle	5	
	Sterile cover of pupil distance adjustment knob	2	
	Sterile cover of focus adjustment knob of main microscope	2	
	Sterile cover of focus adjustment knob of assistant microscope	2	
	Sterile cover of the cranny width	2	
	Sterile cover of the cranny circumgyratetion	2	
	Lens dust pen	1	
	Fuse 110V T6.3A	4	
	Fuse 220V T3.15A	4	
	P54M bulb socket	2	
	Instruction	1	
	Dustproof slipcover	2	
No.4	4mm hexagon spanner	1	In the same one plastic bag
	8mm hexagon spanner	1	
	M20 hexagon odd-spanner	1	
	Odd spanner(the width of hatch is 24)	1	
	Column	1	
	Foot switch	1	
No.5	Arm	1	
Options	CCD	1	
	CCD adapter	1	
	Connector for the camera	1	
	DC-12V power line	1	
	75 ohm video frequency line	1	
	Video frequency line adapter	1	
	Cross-groove screw tool	1	

124.ZB2.0000.01

YZ20T4 OPERATION MICROSCOPE
ENCASEMENT LIST PLANE SKETCH MAP

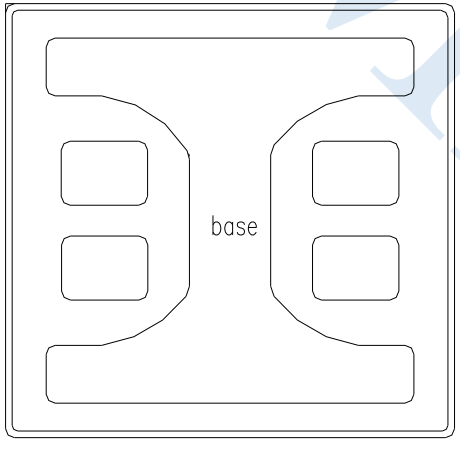

NO.1

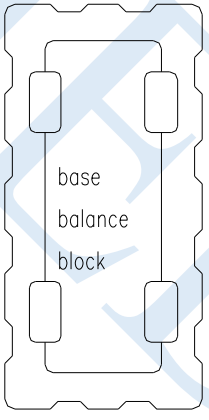

NO.2

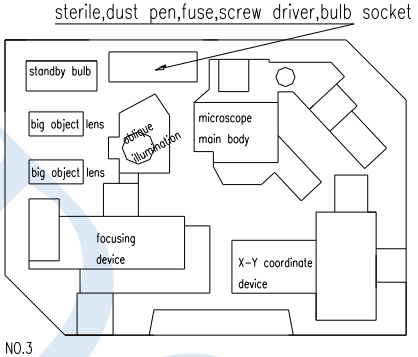

NO.3

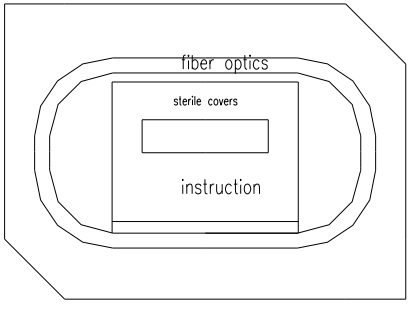

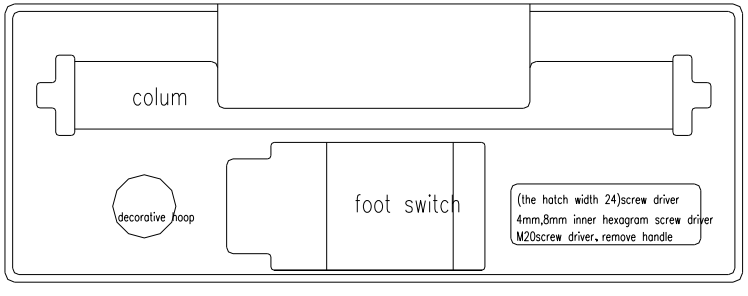

NO.4

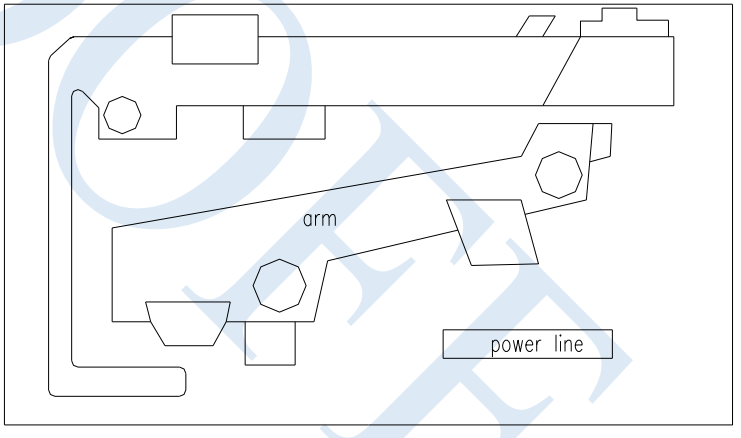

NO.5