User's Manual

Auto Ref/Keratometer HRK-7000/7000A

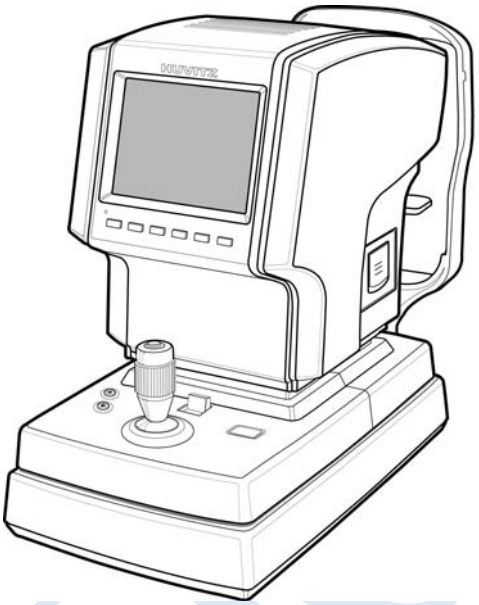

Huvitz
Pacing Progress toward People

IMPORTANT NOTICE

⚠ WARNING

Potential electromagnetic or other interference between medical equipments and other devices being operated together in the same environmental may expert an adverse influence on functioning of the medical equipment. Non-medical equipments not in compliance with the requirements of EN 60601-1 and EN 60601-1-2 should not be used together in the same environmental as the medical equipments.

This equipment has been tested and found to comply with the limits for medical devices in IEC 60601-1-2:2001. These limits are designed to provide reasonable protection against harmful interference in a typical medical installation.

Power Cord

For use of equipment in rated voltage less than 125Vac,minimum 6A,Type SJT or SVT , 18/3AWG,10A, max 3.0m long : One end with Hospital Grade Type, NEMA 5-15P Other end with appliance coupler. For use of equipment in rated voltage less than 250Vac,minimum 6A,Type SJT or SVT , 18/3AWG,10A, max 3.0m long : One end terminatesd with blade attachment plug(HAR) Type, NEMA 6-15P.

This product may malfunction due to electromagnetic waves caused by portable personal telephones, transceivers, radio-controlled toys, etc. Be sure to avoid having objects such as, which affect this product, brought near the product.

The information in this publication has been carefully checked and is believed to be entirely accurate at the time of publication. HUVITZ assumes no responsibility, however, for possible errors or omissions, or for any consequences resulting from the use of the information

contained herein.

HUVITZ reserves the right to make changes in its products or product specifications at any time and without prior notice, and is not required to update this documentation to reflect such changes.

-689-3, Gumjeong-dong, Gunpoci, Gyeonggi-do,
435-862, Republic of Korea

Contents

1. Introduction

1.1. Overview

Auto Ref/Keratometer HRK-7000A is the equipment to provide the information of Spherical, Cylindrical and Axis while measuring the refraction of examinee's eyes. Auto Ref/Keratometer HRK-7000A is the equipment that can measure the corneal curvature of examinee. In addition, it can measure PD (=distance in between pupils) and pupil size. Especially, as its peripheral (=corneal peripheral curvature) measurement is possible as measuring the corneal curvature of examinee, it is possible to know the information on the corneal peripheral curvature as well as the corneal core curvature, which enables the exact prescription for the examinee.
This equipment shall provide the optimal optometry information with the functions of IOL (=measuring intraocular lens) and Retro-Illumination (=observing retro-illumination) to obtain an optimal figure of the eyes' state of examinee.
CLBC (Contact Lens Base Curve) measurement is also a basic function of this product.
The HRK-7000A is provided with an Auto-tracking function and a motorized chinrest function.
Auto-tracking mechanism that automatically achieves alignment in the up/down, right/left direction and focusing.
A motorized up/down chinrest allows the operator to easily adjust the height of the chinrest.

1.2. Classification

Classification of product : 2nd Grade Medical Instrument
Resistance against electric shock : Class I (earthed)
Protection class against electric : Type B
Protection against harmful ingress of water : Ordinary, IPX0
Degree of safety in the presence of a flammable anesthetics mixture with air or with oxygen or with nitrous oxide : Not suitable for use in the presence of a flammable anesthetics mixture with air or with oxygen or with nitrous oxide.
Mode of operation : Continuous

2. Safety Information

2.1. Overview

Safety is everyone's responsibility. The safe use of this equipment is largely dependent upon the installer, user, operator, and maintainer. It is imperative that personnel study and become familiar with this entire manual before attempting to install use, clean, service or adjust this equipment and any associated accessories. It is paramount that the instructions contained in this manual are fully understood and followed to enhance safety to the patient and the user/operator. It is for this reason that the following safety notices have been placed appropriately within the text of this manual to highlight safety related information or information requiring special emphasis. All users, operators, and maintainers must be familiar with and pay particular attention to all Warnings and Cautions incorporated herein.

⚠ WARNING

"Warning" indicates the presence of a hazard that could result in severe personal injury, death or substantial property damage if ignored.

NOTE

"Note" describes information for the installation, operation, or maintenance of which is important but hazard related if ignored.

⚠ CAUTION

"Caution" indicates the presence of a hazard that could result in minor injury, or property damaged if ignored.

2.2. Safety Symbol

The International Electrotechnical Commission (IEC) has established a set of symbols for medical electronic equipment which classify a connection or warn of any potential hazards. The classifications and symbols are shown below.

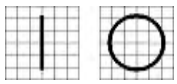	I and O on power switch represent ON and OFF respectively.
	Type B Isolated patient connection.
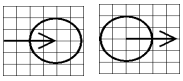	It indicates the connection of signal input/output.
	This symbol identifies a safety note. Ensure you understand the function of this control before using it. Control function is described in the appropriate User's or Service Manual.
	It indicates the year of manufacture and the manufacturer.
	Identifies the point where the system safety ground is fastened to the chassis. Protective earth connected to conductive parts of Class I equipment for safety purposes.

	Hot surface.
UL60601-1 CAN/CSA C22.2 NO.601.1	MEDICAL EUIPMENT WITH RESPECT TO ELECTRIC SHOCK FIRE AND MECHANICAL HAZARDS ONLY IN ACCORDANCE WITH UL 60601-1, AND CAN/CSA C22.2 NO.601.1
	<u>Disposal of your old appliance</u> When this crossed-out wheeled bin symbol is attached to a product it means the product is covered by the European Directive 2002/96/EC. All electrical and electronic products should be disposed of separately from the municipal waste stream via designated collection facilities appointed by the government or the local authorities. The correct disposal of your old appliance will help prevent potential negative consequences for the environment and human health. 4. For more detailed information about disposal of your old appliance, please contact your city office, waste disposal service or the shop where you purchased the product.
	Alternating Current

2.3. Environmental Considerations

Please avoid the environment below for the operation and storage of the equipment.

	Where the equipment is exposed to water vapor. Don't operate the equipment with wet hands.
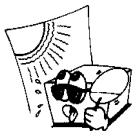	Where the machine is exposed directly to the sunlight.
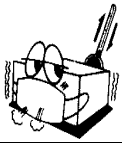	Where the temperature changes frequently (Normal temperature for operation of the machine is at the range of 10°C ~ 35°C, and the humidity is at the range of 30%~70%.
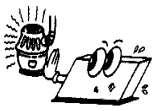	Where any heaters are at the close distance to the machine.
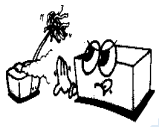	Where the humidity is high and there are problems to the heat dissipation and/or ventilation.
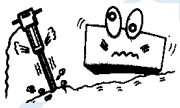	Where the equipment is subject to excessive shocks or Vibrations.

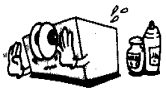	Where the machine can be exposed to the chemical or flammable substances.
	Please keep the equipment out of dust and do not let inserted any metal parts such as coins, clips, etc.
	Do not disassemble or open the machine. The manufacture shall have no responsibility for any problems caused by these.
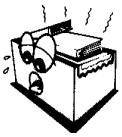	Do not close the thermal ventilation outlet.
	Do not connect the AC power plug into the outlet while not putting the parts of machine together completely. It can harm the equipment.
	Do not pull the plug out of outlet while holding the cord.

For the normal operation of the machine, please keep the ambient temperature is 10℃ ~ 35℃, humidity is 30% ~ 75% and atmospheric pressure is 800 ~ 1060hpa. For the Transfortation of the machine, please keep the ambient temperature is -40℃ ~ 70℃, humidity is 10% ~ 95% and atmospheric pressure is 500 ~ 1060hpa. For the Storage of the machine, please keep the ambient temperature is -10℃ ~ 55℃, humidity is 30% ~ 75% and and atmospheric pressure is 700 ~ 1060hpa. Avoid environments where the equipment is exposed to excessive shocks or vibrations.

2.4. Safety Precaution

This equipment has been developed and tested in conformity with domestic & international safety standards and regulations, which guarantees the high stability of this product. This guarantees a very high degree of safety for this device. The legislator expects us to inform the user expressively about the safety aspects in dealing with the device. The correct handling of this equipment is imperative for its safe operation. Therefore, please read carefully all instructions before switching on this device. For more detailed information, please contact our Customer Service Department or one of our authorized representatives.

1. This equipment must not be used (a) in an area that is in danger of explosions and (b) in the presence of flammable, explosive, or volatile solvent such as alcohol, benzene or similar chemicals.

2. The device should neither be kept nor installed in the place with high humidity. For the optimal operation, the humidity should be at the range of 30%~75%. The machine should not be exposed to the place where water splashes, drips or sprays. Do not place containers containing fluids, liquids, or gases on top of any electrical equipment or devices

3. The equipment must be operated only by, or under direct supervision of properly trained and qualified person/s.

4. Modifications of this equipment may only be carried out by Huvitz's service technicians or other authorized persons.

5. Customer maintenance of this equipment may only be performed as stated in the User's Manual and Service Manual. Any additional maintenance may only be performed by Huvitz's service technicians or other authorized persons.

6. The manufacturer is only responsible for effects on safety, reliability, and performance of this equipment when the following requirements are fulfilled: (1) The electrical installation in the respective room corresponds to the specifications stated in this manual and (2) This equipment is used, operated and maintained according to this manual and Service Manual.

7. The manufacturer is not liable for damage caused by unauthorized tampering with the device(s). Such tampering will forfeit any rights to claim under warranty.

8. The equipment may only be used together with accessories supplied by Huvitz's. If the customer makes use of other accessories, use them only if there are usability under technical safety aspects has been proved and confirmed by Huvitz or the manufacturer of the accessory.

9. Only persons who have undergone proper training and instructions are authorized to install, use, operate, and maintain this equipment.

10. User's manual or service manual should be kept in the place where the persons in chare of operation and maintenance can access easily any time.

11. Do not force cable connections. If a cable does not connect easily, be sure that the connector (plug) is appropriate for the receptacle (socket). If you cause any damage to a cable connector(s) or receptacle(s), let the damage(s) be repaired by an authorized service technician.

12. Please do not pull on any cable. Always hold on to the plug when disconnecting cables.

13. This equipment may be used for the international application related to Refractometry and Keratometry according to this manual.

14. Before every operation, proceed with visual inspection on the equipment exterior to seek any mechanical damage(s) to ensure the proper functioning.

15. Do not obstruct any ventilation outlet for proper heat dissipation.

16. In case of any presence of smoke, spark or abnormal noise/smell from the machine, please power off immediately and pull out the plug.

3. Characteristics

1. It is possible to measure the refractive power and corneal curvature with one(1) set of the machine: Refractometry and Keratometry

2. As the measurement range of refractive power is wide from-25D to +22D, it can measure the severe myopia.

3. As measuring the curvature, the minimum measurable pupil diameter is Ø2.0mm.

4. The equipment can measure the peripheral part of cornea so that user can see the value of curvature and eccentricity of each point while consecutively measuring the curvature of peripheral part around cornea to the direction of 90° degree to the upper/below/right/left from the core of cornea.

5. The refractive error can be showed in the form of Zernike topographic map.

6. The fogging technique which is applied to the internal fixed target is to make the more accurate measurement possible while letting the eyes of patient at the natural and comfortable state.

7. It is possible to select the display type of Refractometry and Keratometry.

8. It is possible to measure the distance in between pupils (PD).

9. Through the retro-illumination, the HRK-7000A can observe the eyes' condition of cataract patients or the scratches on the surface of contact lenses. It can store the two (2) images for each eye, and show the patients displaying them on the monitor screen.

4. Note for Use

1. Do not hit or drop the instrument. The instrument may be damaged by the strong impact. The impact may damage the function of this instrument. Handle it with care.

2. The precision of measurement can be affected when the machine is exposed to the direct sunlight or too bright indoor illumination. It is recommended to perform the measurement in the dark optometry room.

3. If you want to use it as connecting the device to other equipment, please follow the guidance of our local representative.

4. Sudden heating of the room in cold areas will cause condensation of vapor on the protective glass in the measurement window and on optical parts inside the instrument. In this case, wait until condensation disappears before performing measurements.

5. Make sure to keep the lens in examinee side is clean at all times. In case that it has become dirty by dusts or other substances, it can cause errors in the machine or affect the precision of measurement.

6. In case of any presence of smoke, smell or noise during the use of machine, please contact our local representative after plugging it off from the socket (outlet).

7. If you clean the surface of the equipment with organic solvents such as alcohol, thinner, benzene, etc, it can damage the machine. So, please do not use them.

8. In case of moving HRK-7000A, carry it holding the lower part of machine body with both hands as fixing the stage after switching the machine off all the time.

9. In case of no use of the machine for a long time, please put the dust cover on the device after powering and plugging off.

5. Names and functions of each part

5.1. Main parts

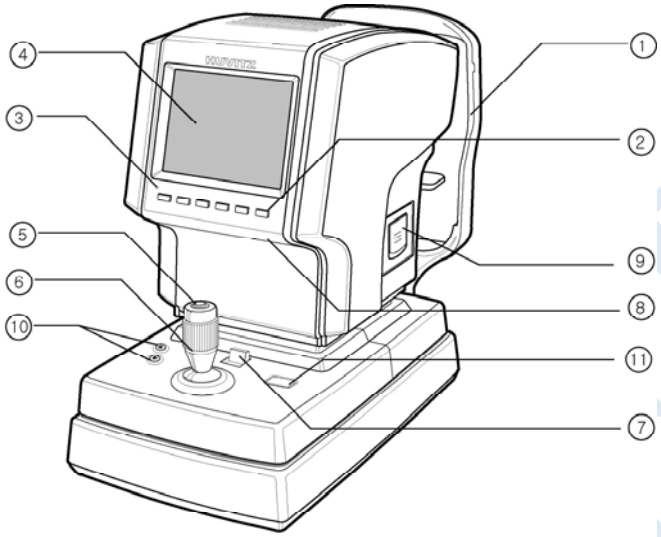

[Figure 1. Front]

---

1. **Height Adjustment Mark:** Adjusts the eyes' height of examinees
2. **Operation Buttons:** Selecting of functions
3. **Operation Lamp :** Indicates whether or not the electric power is on
4. **Display Monitor:** Monitor for measurement
5. **Measurement Button:** Performing the measurement by pressing it after focusing.
6. **Operation Lever:** Adjusting the focus by moving to the directions of forward/backward, left/right, up and down.
7. **Stage Fixing Lever:** Fixing the stage
8. **Monitor Brightness Adjusting Knob:** Adjusting the brightness of monitor
9. **Printer:** Printing the measured results
10. **Chinrest up/down button:** Move up or down the chinrest.
11. **Printer button:** A button for printing of measuring results.

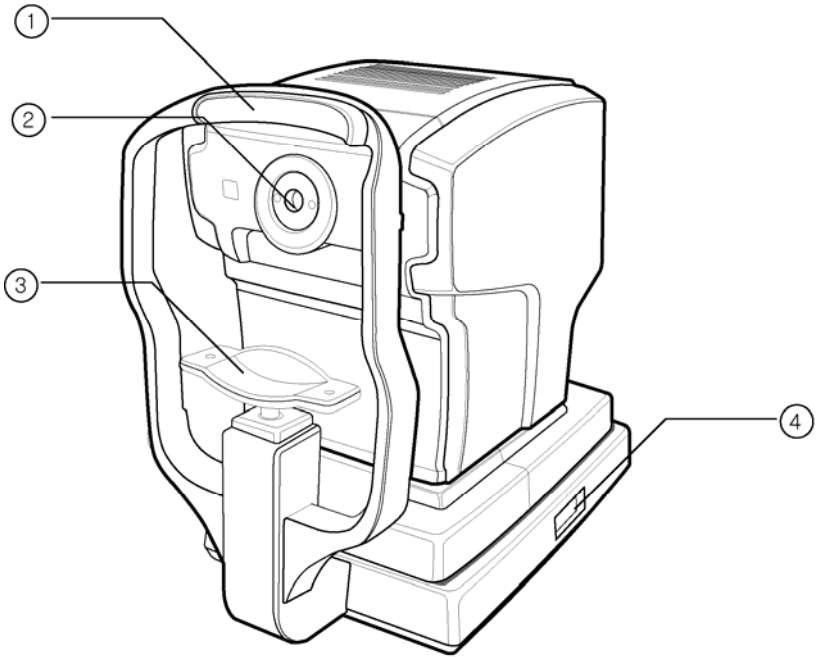

[Figure 2. Back Section]

---

1. **Forehead Rest:** Preventing the vibration by fixing the forehead
2. **Measuring Object Lens**: Measuring the image imaging on the retina of eyes.
3. **Chin Rest:** Preventing the vibration by fixing the chin
4. **Power Switch:** Switch for power on/off

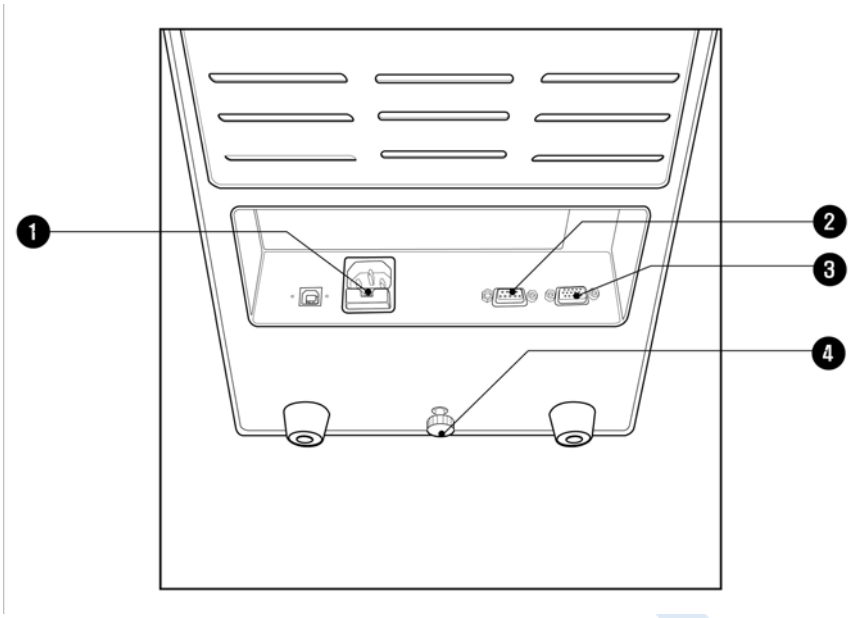

[Figure 3. Bottom Section]

1. **Power Supply Socket:** A socket connecting to exterior power plug
2. **Serial Interface Connector:** A terminal connecting to the exterior equipment
3. **Exterior Monitor Connection Connector:** Connecting into the exterior monitor
4. **Clamping Bolt:** Fixing the system stage

NOTE
As connecting to exterior monitor, noise can appear on the monitor owing to the length or kind of cable, and the quality of monitor.

5.2. Explanation on Switches in Front

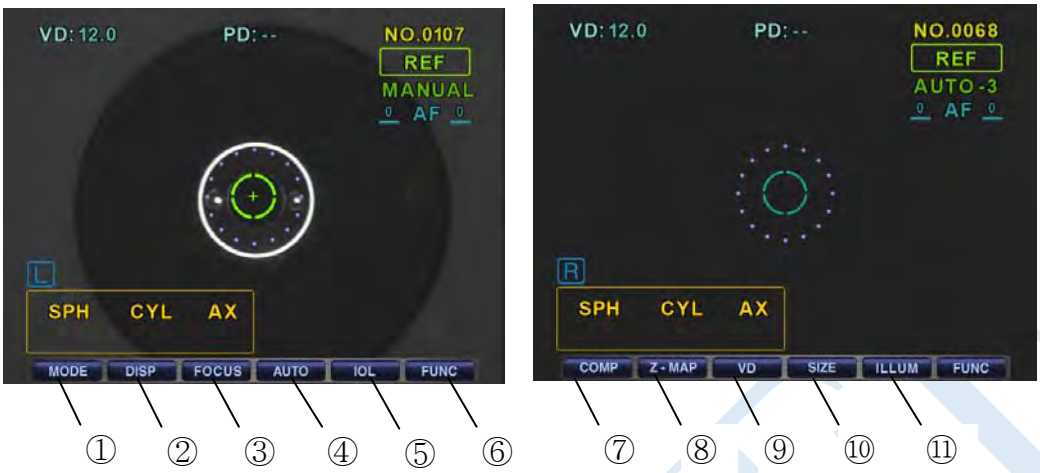

[Figure 4. Front Section Switches]

---

1. **MODE Button:** A switch to change the mode for measurement
2. **DISP Button:** A switch to indicate the measured results on the monitor
3. **FOCUS Button:** A switch to change Auto Focus mode.
4. **AUTO Button:** A switch to begin to perform the measurement manually or automatically **5.**
5. **IOL Button:** A switch to measure the eyesight of cataract patients or patients undergone IOL implantation.
6. **FUNC Button:** A switch to change the functions of ③, ④, ⑤ buttons
7. **Comp Button:** Virtual Comparison Function.
8. **Z-MAP Button:** A switch to iindicate Zernike Map.
9. **VD Button:** To change the VD(Vertex Distance) value.
10. **SIZE Button :** To measure size of pupil.
11. **ILLUM Button:** To check the status of the cornea, crystalline lens and contact lens by freezing images

6. Installation of Equipment & Preparation of Measurement

1. **Release of Lock on Stage Section**
   Unlock the clamping bolt at the bottom part of Chin-rest of the machine by rotating it counterclockwise, and change the stage fixing lever behind the joystick to the direction of UNLOCK.

2. **Connection of Power Cable**
   - Put HRK-7000A on the table.
   - Insert the power cable into power connector at the bottom of the main body.
   - After checking that the power of the machine is off, insert the power plug into the AC outlet (socket).

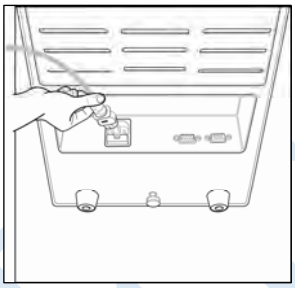

[Figure 5. Connection of Power Cable]

3. **Inserting Chin Rest Paper**
   - Pull out the pushing pins at left/right sides.
   - Insert the pushing pins into the holes at left/right sides of the chin-rest paper.
   - Stick the chin-rest paper inserted with the pushing pins onto the Chin-rest.

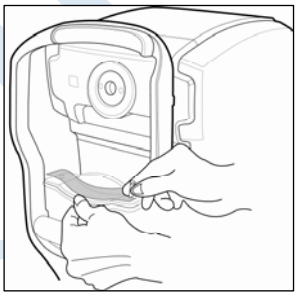

[Figure 6. Inserting Chin-rest Paper]

4. **Installation of Printing Paper**
   Please refer to section 8.2 regarding the sequence of installation of printing paper.

5. **Input of Message**
   Input the contents desirable to be printed such as name or address of hospital, etc in the memory of message editing monitor in advance at all times.

6. Check of Setup

As for setup of corneal vertex distance, indication of CYL, unit of SPH/CYL, indication type of corneal measurement, corneal equivalent curvature, date, etc, please check them in SETUP mode.

7. Transmission to Other Machines

In case of transmitting the measured results to other machines, prepare other machines while connecting the cable into the interface connector of this machine. You can select the transmitting speed in the user's SETUP mode. Please contact to the agent where you bought this machine for details.

7. Exercise through Model Eye

1. Power On of Main Body
   - Connect the power plug appropriately as shown in the picture.
   - Let the power switch on.
   - Measuring screen appears as system check is completed.

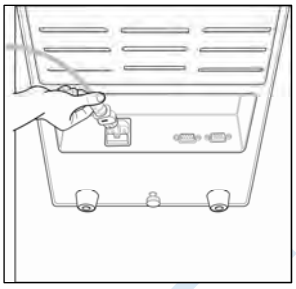

[Figure 7. Power Cable Connection]

2. Installation of Model Eye
   - As removing the chin-rest paper, insert the pushing pins after adjusting the lower hole of model eye to the hole of chin-rest.

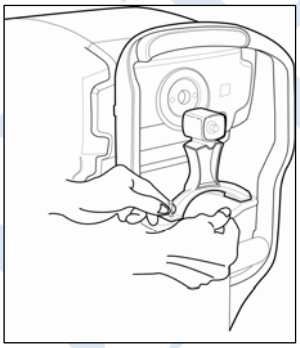

[Figure 8. Model Eye Installation]

3. Release of Lock to Stage Section
   - Release the clamping bolt at the lower cover of chin-rest of the machine by rotating it counterclockwise, and convert the stage fixing lever behind the joystick to the direction of UNLOCK.

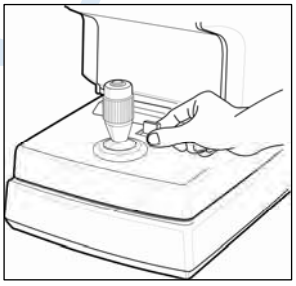

[Figure 9. Release of Lock to Stage Section]

4. Change to K&R, REF Modes
   - If “K&R” or “REF” is not indicated on the monitor, push the MODE button until one of them is to appear.
5. Adjustment of Position for Measurement & Focus
   - Tilt the operation lever over the model eye until the bright dots appear around the internal array ring.
   - Adjust so that the bright dot shall come inside the array ring while watching the monitor.
   - Adjust the focus so that the focus-adjustment circle symbol shall appear on the bright dot.

1. Height Adjustment: Adjust it by rotating the operation lever or the chin-rest height adjustment lever.

2. Left/Right Adjustment: Adjust so that the bright dot shall come inside the internal array ring by tilting the operation lever to the directions of left/right.

3. Focus Adjustment: Adjust the focus so that the focus-adjustment circle symbol shall appear on the bright dot by tilting the operation lever forward/backward.

- **Auto-tracking Function**

Press the FOCUS button for Auto-tracking Function.

1. Perform rough alignment and focusing by manipulating the joystick to place in the working range of auto-tracking.

2. When the device is placed within the working ranfe of auto-tracking, it automatically starts alignment and focusing.
   - The mark is displayed, when the main body is not within the working range of auto-tracking.

   - At that time, manipulrate the joystick or chinrest up/down button in the direction of the as Figures.

Tilt the joystick slightly to the left.

Tilt the joystick slightly to the right.

Pull the joystick forward.

Pull the joystick backward.

Move the chinrest down.

Move the chinrest up.

[Figure 10. When the main body is not within the working range of auto-tracking]

Too close to the patient's eye.

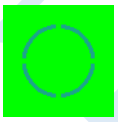

Optimum condition.

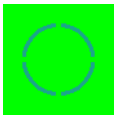

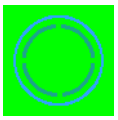

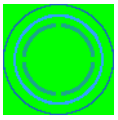

Too far from the patient's eye.

[Figure 11. Focusing Indicator]

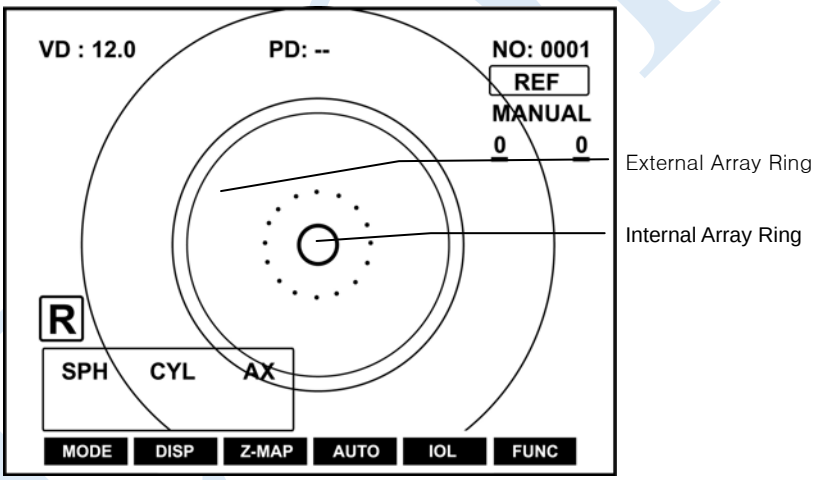

[Figure 12. Adjustment of Measuring Position & Focus]

6. Measurement

1. Manual Adjustment

① Adjust the focus and position of model eye as like in the procedure of adjusting measurement position & focus explained in the previous page.

② Push the measurement switch. In case that the measurement is not performed while the message of TRY AGAIN appears on the upper left side of the monitor, push the measurement switch again after repeating the procedure of (a).

③ Check whether diopter value is measured or not. In case that the measured value is not satisfactory, measure it with the same way and check it again.

2. Automatic Adjustment

① Push AUTO button at the bottom of monitor.

② Adjust the position and focus of model eye as like in like in the procedure of adjusting measurement position & focus explained in the previous page.

③ It the focus is well adjusted as the bright dot appears inside the internal array ring and the focus-adjustment circle symbol appears on the bright dot, then, the measurement starts automatically.

8. Measurement

⚠ WARNING

If the following situations happen, contact to the agents of Huvitz after immediately pushing the power switch off, and pulling the power cord out of AC Power connection part.

- In case that smoke comes, or strange smell or sound is heard from the equipment.
- In case that liquid is poured to the machine, or metallic substance is inputted into the equipment.
- In case that the equipment is fallen down, or the exterior case of it is broken

The keys change as follows as pushing FUNC button.

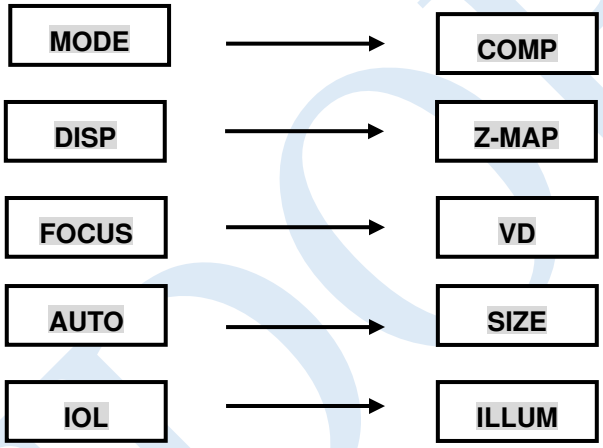

The change of measurement mode is to be set up as shown in the above figure as the product is wrapped in Huvitz. IOL button is possible to use in K&R measurement mode and REF measurement mode only. As pushing IOL button, the function of measuring IOL is to be performed, and the function stops as pushing the button again (refer to the section 8.6). The refractive power value measured according to the value of VD (Vertex

Distance) is to be indicated in the mode of refractive power measurement. As pushing VD button, the refractive value according to VD value is to be indicated while the value of VD changes from 0.0 to the values (12/13.5/15mm) selected in user SETUP Mode.

NOTE

As the equipment does not operate for over 5 minutes while the power switch is at the state of "ON", the power saving mode is to be performed. If you push any buttons in the power saving mode, it is changed to the mode of measurement preparation.

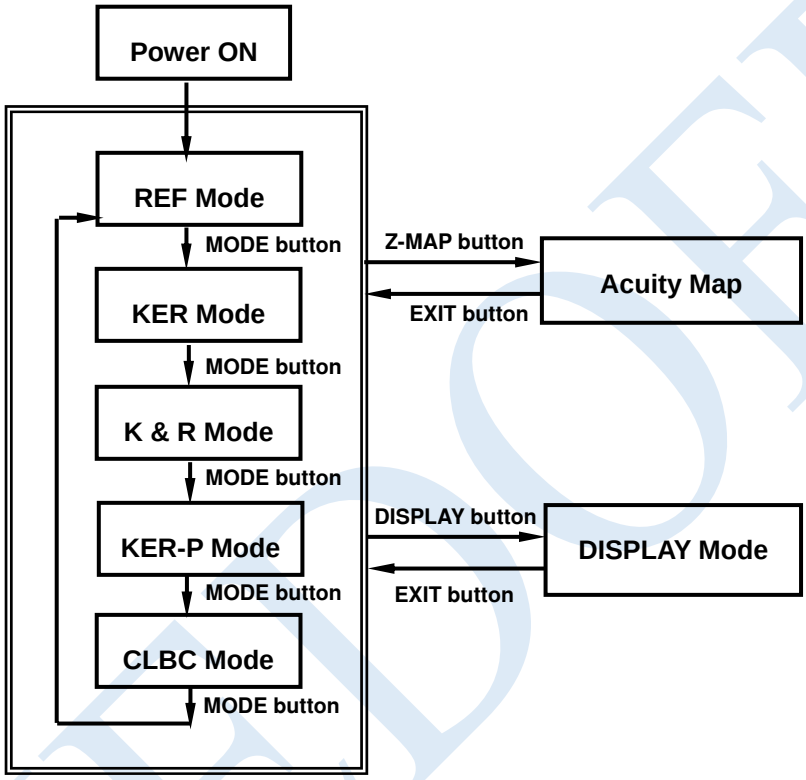

[Figure 13. Relation between each button and measurement mode]

8.1. Refractometry (REF Mode)

It is the mode to measure the refractive power solely.

1. Let the power switch “ON”.
   - The measurement window as shown in the picture below appear on the screen of monitor as system check is completed.

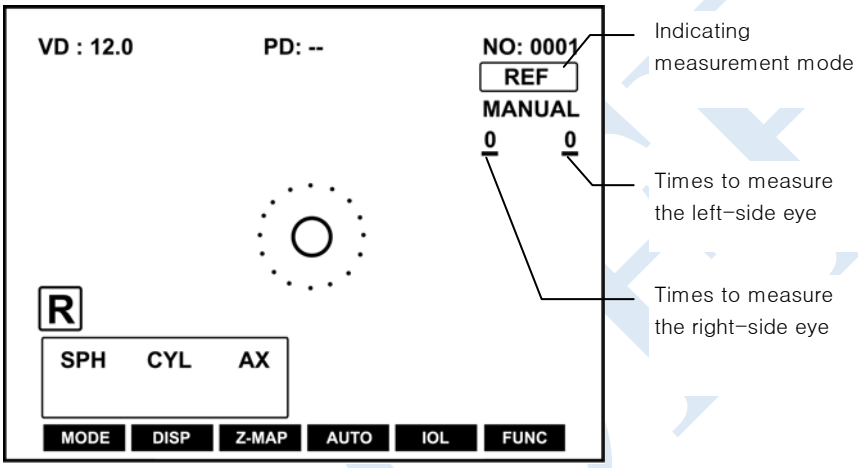

[Figure 14. REF Mode Screen]

2. Check the measurement screen appeared on the monitor.

NOTE

- If the measurement screen as shown in the above picture does not appear on the monitor screen, let the power switch “ON” again in 10 seconds after switching it off. If the measurement screen continues not to appear either, please contact to the agents of Huvitz.
- If the image of measurement screen is dark, adjust the brightness by using the brightness-adjustment switch.

3. Check the user Setup mode.

   Check and select the diverse functions relating to measurement including VD value or printing condition. Input the message wanted to be printed together with measurement data (refer to section 9.5).

8.1.1. Manual Measurement Mode

As pushing Auto button in the AUTO mode, it changes to the manual measurement mode. If you change “Auto Start” to “OFF”, the auto measurement function can be stopped.

① Adjustment of Eye Height

- Let the examinee sit in front of the machine.

⚠ CAUTION

-Make sure that the examinee should not put his or her hands or fingers under chin-rest. The hands or fingers can get injured.
-For the prevention of infection, cleanse the forehead-rest with a solvent such as ethanol for every different examinee.
-To keep it clean, change the chin rest paper for every different examinee.

- Let the patient sit comfortably by adjusting the table or chair of electric machine.
- Let the patient put his or her face on chin-rest and his or forehead stick closely to the forehead-rest.
- Adjust the examinee’s eye height to the height array indicator by rotating the height adjustment lever as shown in the picture.

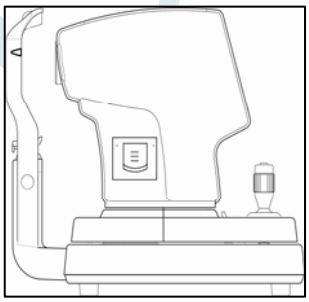

[Figure 15. Eye Height Adjustment]

② Adjustment of Measurement Position and Focus

⚠ CAUTION

Do not insert your hands or fingers between stage and base. Also, make sure that the examinee should not put his or her hands or fingers there. Hands or fingers can get injured.

- Pull the body of equipment to the front of user by using the operation lever.
- Let the right-side eye of examinee appear at the center of monitor screen by slowly pushing and rotating the operation lever forward. At this time, let the glittering bright dot come into the core of internal array ring.
- Ask the examinee to look at the internal fixed target.
- Adjust the focus so that the outline of bright dot can be apparent. If the focus is adjusted appropriately, the circle symbol appears on the bright dot.
- Height Adjustment: Adjust it by rotating the operation lever or chin-rest lever.
- Left/Right Adjustment: Move the operation lever left and right so that the Outer Alignment Ring is aligned with the Mire Image

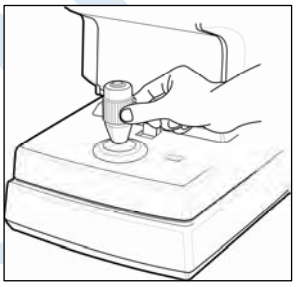

[Figure 16. Height Adjustment]

- Focus Adjustment: Adjust it to the bright dot by tilting the operation lever forward/backward.

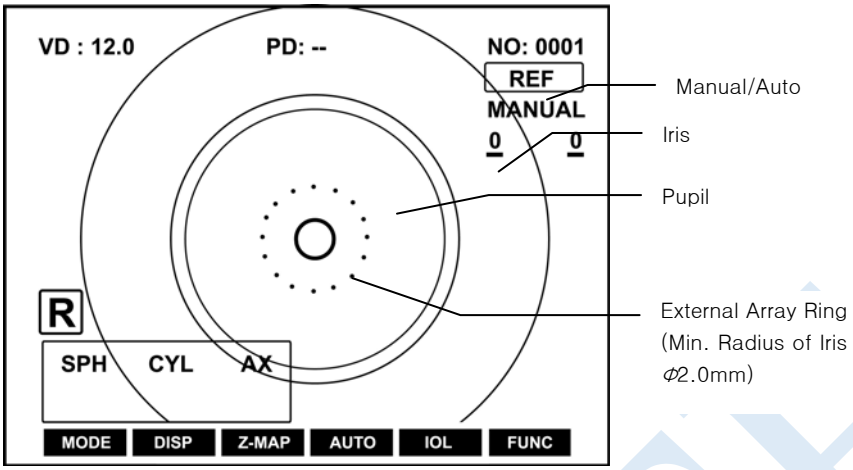

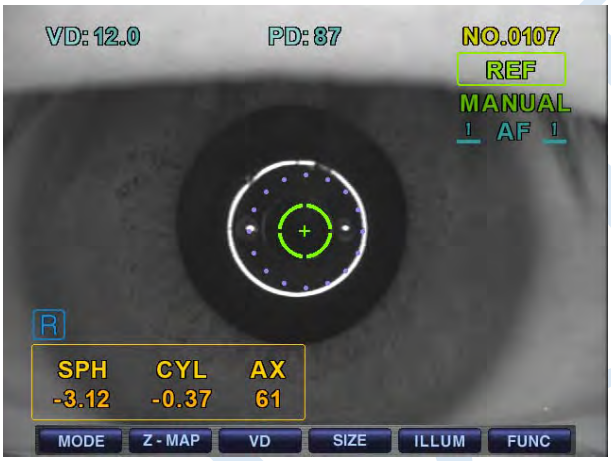

[Figure 17. REF Manual Mode Screen]

NOTE

- As it is not enough to adjust it by tilting the operation lever, adjust it by pushing the stage to the directions of left/right.
- If the image does not appear well because it is too bright or dark, adjust the brightness by rotating the knob at the bottom of HRK-7000A monitor(Brightness adjustment).
- As consecutively measuring the refractive power, there can be errors in the measured value with regard to the examinee to which the adjustment power easily intervenes.
- As the bright dot and pupil can not keep the same axis during the consecutive measurement, the error can be caused for measurement.

③ Measurement

- Push the measurement button.
- If you stay while pushing the measurement button, the measurement is to be performed consecutively.
- As the measurement is completed, the measured result is to be indicated on the screen of monitor.
- In case of the consecutive measurement, the result of the previous measurement is indicated.

④ Repeated Measurement

- Measure repeatedly if necessary.
- The latest measured value is to be indicated every time new measurement is performed.
- It shall memorize the measured values by 10 times for each left/right eye(except for error). It can be seen on the screen of DISPLAY mode.

⑤ Measurement of Counter-side eye

- Measure the left-side eye by pushing the stage to the direction of right while holding the operation lever.

- As measuring the left/right eyes, the value of PD (Pupil Distance) is to be indicated on the monitor.

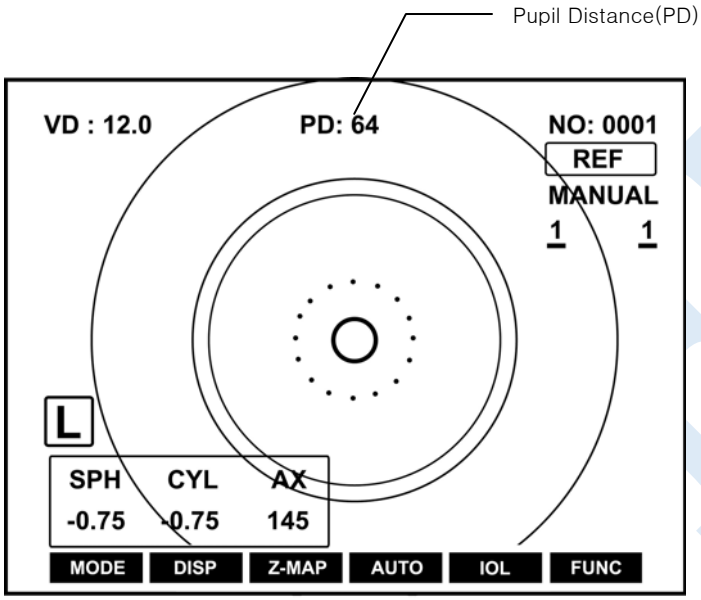

[Figure 18. Screen indicating the pupil distance]

⑥ Print

- Print the measured result by pushing the PRINT button.

- The contents selected in SETUP mode is to be printed.(Refer to section 9.5)

- Cut the printing paper off from the end of it while lifting it.

- Put the name of examinee in the blank of NAME if necessary.

NOTE

- As it is printed, the values measured so far are to be removed.
- As a thermal printing record, the printed characters are easy to be faded away. Please make it copied if you want to keep it for a long time.

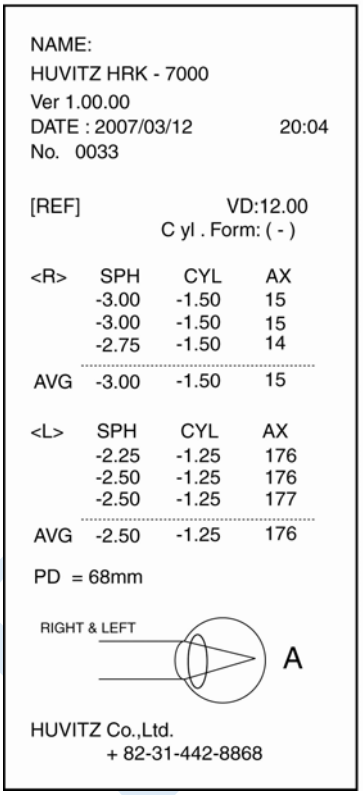

NAME:
HUVITZ HRK - 7000
Ver 1.00.00
DATE : 2007/03/12 20:04
No. 0033

[REF] VD:12.00
C yl . Form: (-)

<R>	SPH	CYL	AX
	-3.00	-1.50	15
	-3.00	-1.50	15
	-2.75	-1.50	14
AVG	-3.00	-1.50	15

<L>	SPH	CYL	AX
	-2.25	-1.25	176
	-2.50	-1.25	176
	-2.50	-1.25	177
AVG	-2.50	-1.25	176

PD = 68mm

HUVITZ Co.,Ltd.
+ 82-31-442-8868

[Figure 19. Example of Print]

8.1.2. Auto Measurement Mode

As pushing Auto button in Manual Measurement mode, it automatically changes to the Auto measurement mode.
As the condition of good array between the machine and the measured eye is reached, the measurement is to be performed automatically without pushing the STOP button.

① Perform the ①, ② procedure of manual measurement mode.

② Measurement

- As the array and adjusting the focus is completed, the measurement is to be performed automatically.

- After the measurement of times (3 or 5 times) designated in user Setup mode is performed, the measured result appear on the screen of monitor.

- Maximum of 10 units of data is to be stored, and you can re-check them in DISPLAY mode.

[Figure 20. Screen indicating Auto Measurement Mode]

③ Measurement of Another Eye

- Measure the left eye according to the same procedure by moving the stage to the right side.

- As the measurement to both eyes is completed, the value of PD is to be indicated automatically on the screen of monitor.

④ Print

- Push the PRINT button in case that the measurement is conducted to the one eye only.

- In case of selecting the condition of A-Print as “ON” in Setup mode (refer to section 9.5), the measured result is to be printed automatically as the measurement of both eyes is completed.

- The message selected in Setup mode is to be printed together with the measured data.

- As the message of TRY AGAIN happens, please refer to the explanation below.

In case of TRY AGAIN	Management
Poor position adjustment	Measure it after adjusting the exact position again.
As eyelid or eyelashes hide the pupil	Let the examinee open the eye wide, or measure it while pushing the upper eyelid of examinee upward.
As the pupil is smaller than Alignment Ring	This machine's measurable min radius of pupil is 2.0mm. Though it is possible to measure in the bright place, make sure that the bright illumination or sunlight shall not shed directly on examinee's eye.
As the examinee has the disease such as cataract	The minor cataract can be measured in Retro-Illum mode. As errors are worried to happen by the scratch on cornea or turbidization of crystalline lens, measure it in Retro-Illum mode. Measure the corneal curvature of cataract patient not in K&R mode, but in KER mode.
As the examinee has IOL implanted	As measuring the refractive power of eye implanted with IOL, measure it in IOL mode.
As Mire Image looks as if it changed to tears	Measure after letting the examinee blink several times.
As Mire Image is not apparent because the cornea is dry	
As Mire Image has been transformed irregularly owing to strong negative astigmatism or corneal ailment.	Impossible to measure
As it exceeds the possible range of measurement	

8.2. Keratometry (KER Mode)

It is the mode to measure the corneal curvature solely.
Do not measure the base curve of hard contact lens in this mode. Please refer to CLBC mode in section 8.5 regarding the base curve of hard contact lens.

1. Check whether or not the screen of monitor is in measurement mode.
2. KER Mode Selection
   - Push MODE button until “KER” is to be indicated on the upper right side of the screen.
3. Perform the same 2, 3 procedure of consecutive measurement of refractive power.

8.2.1. Manual Measurement Mode

① Perform the adjustment of array and focus as like in the procedure of section 8.1.1.

② Measurement
- Push the measurement button.
- The measurement continues to be performed as you keep pushing the measurement button.
- As the measurement is completed, the measured result is to be indicated on the screen of monitor. In case of the consecutive measurement, the result of previous measurement is to be indicated.

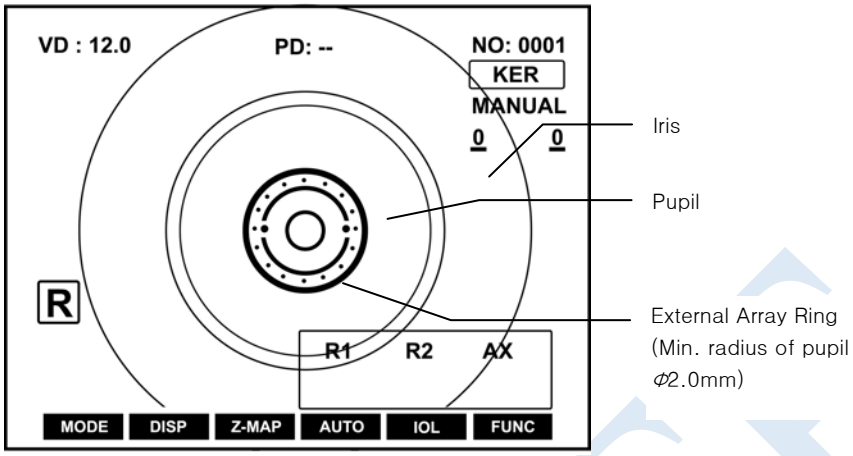

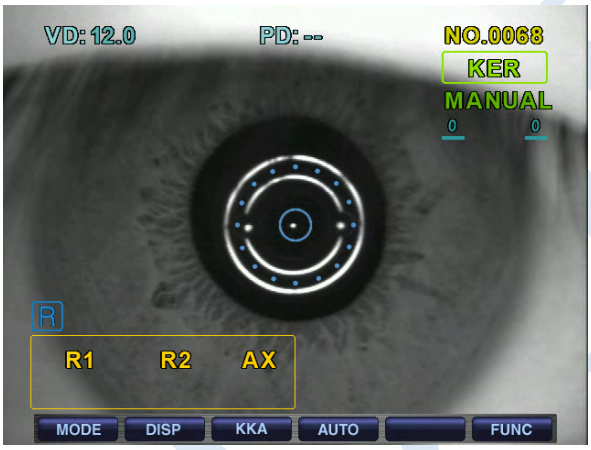

[Figure 21. Screen indicating KER mode]

③ Perform the same 4, 5 procedure of the consecutive measurement mode of refractive power.

④ Print the measured result through the same 6 procedure of section 8.1.1

NAME:
HUVITZ HRK - 7000
Ver 1.00.00
DATE : 2007/03/12 20:04
No. 0033

[KER] Index: 1.3375

<R>	R1	R2	AX
	8.02	7.81	165
	8.05	7.83	163
	8.06	7.83	162
	mm	D	AX
R1	8.04	42.00	163
R2	7.82	43.25	73
AVG	7.93	42.62	
CYL		-1.25	163

<L>	R1	R2	AX
	8.12	7.93	10
	8.11	7.93	9
	8.12	7.93	10
	mm	D	AX
R1	8.12	41.50	10
R2	7.93	42.50	10
AVG	8.02	42.00	
CYL		-1.00	10

PD = 68mm

HUVITZ Co.,Ltd.
+ 82-31-442-8868

[Figure 22. Example of Print]

8.2.2. Auto Measurement Mode

As pushing Auto button in Manual measurement mode, it is to be changed to Auto measurement mode. As the condition of good array between the machine and measured eye is reached, the measurement is to be performed without pushing the measurement button.

① Adjust the array and focus as like in procedure 2 of section 8.1.1

② The measurement is to be performed automatically as like in procedure 2 of section 8.1.2

③ Print the measured result as like in procedure 6 of section 8.1.1

8.3. Corneal Curvature / Refractive Power Measurement Mode (K&R Mode)

This is the mode to consecutively perform the measurement of corneal curvature and refractive power.

1. Check whether or not the measurement screen appears on the screen of monitor.
2. Keep pushing MODE button while selecting K&R measurement mode until “K&R” is to be indicated on the upper right side of the screen.
3. Perform the same procedure as 2, 3 procedure in consecutive measurement of refractive power.

8.3.1. Manual Measurement Mode

① Perform the adjustment of array and focus as like in procedure 1, 2 of section 8.1.1.

② Measurement

- Push the measurement button.
- As you keep pushing the measurement button, the measurement is to be performed consecutively.
- As the measurement is completed, the measured result is to be indicated on the screen of monitor.
- In case of consecutive measurement, the previous value is displayed.

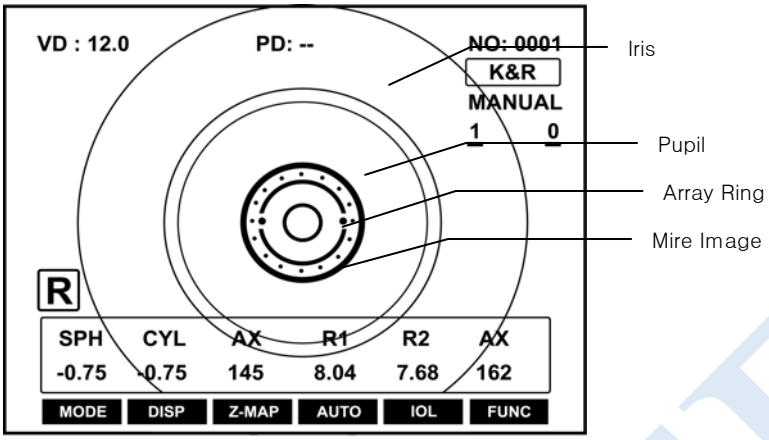

[Figure 23. Screen indicating K&R Mode]

③ Perform the same procedure as like in procedure 4, 5 of section 8.1.1.

④ Print the measured result through the same procedure as like in procedure 6 of section 8.1.1.

NAME:
HUVITZ HRK - 7000
Ver 1.00.00
DATE : 2007/03/12 20:04
No. 0033

[REF] VD:12.00
C yl . Form: (-)

<R>	SPH	CYL	AX
	-2.00	-1.50	11
	-2.00	-1.50	10
	-2.00	-1.50	10
AVG	-2.00	-1.50	10

<L>	SPH	CYL	AX
	-2.25	-1.00	174
	-2.50	-1.00	175
	-2.50	-1.00	174
AVG	-2.50	-1.00	174

[KER] Index: 1.3375

<R>	R1	R2	AX
	8.12	7.91	165
	8.12	7.91	164
	8.12	7.91	164
	mm	D	AX
R1	8.12	41.75	167
R2	7.91	42.50	77
AVG	8.01	42.12	
CYL		-0.75	167

<L>	R1	R2	AX
	8.11	7.93	10
	8.10	7.92	9
	8.10	7.91	7
	mm	D	AX
R1	8.11	41.75	9
R2	7.92	42.50	9
AVG	8.01	42.12	
CYL		-0.75	9

PD = 68mm

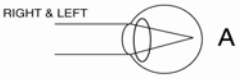

HUVITZ Co.,Ltd.
+ 82-31-442-8868

[Figure 24. Example of Print]

⑤ Selection of Screen Indication Type

- In the measurement mode including the refractive power measurement, you can designate the sign of astigmatic refractive power in SETUP mode.

- Also, you can indicate the measured data of refractive power on the screen according to VD value in the measurement mode including the refractive power measurement.

- In the measurement mode including corneal curvature measure, you can designate the screen indication type (R1/R2/AX→K1/K2/AX→AR/CY/AX) in SETUP mode.

8.3.2. Auto Measurement Mode

As pushing Auto button in manual measurement mode, it is to be changed to auto measurement mode.
As the condition of good array between the machine and measured eye is to be reached, the measurement is to be performed automatically without pushing the measurement button in Auto measurement mode.

① Adjust the array and focus as like in procedure 2 of section 8.1.1.

② The measurement is to be performed automatically as like in procedure 2 of section 8.1.2.

③ Print the measured result as like in procedure 6 of section 8.1.1.

8.3.3. Diverse Indications

	Kind	Name	Meaning of Signs	Measures
Measurement of Refraction	#	Indicating low reliability	Measured value of low reliability	Measure again
	+ OU T	Exceeding measurable range	SPH exceeds +22D	Impossible to measure
	− OU T	Exceeding measurable range	SPH exceeds −25D	
	C OU T	Exceeding measurable range	CYL exceeds ±10D	
Measurement of Curvature	#	Indicating low reliability	Measured value of low reliability	Measure again
	+ OU T	Exceeding measurable range	Radius of curvature exceeds 10.2mm	Impossible to measure
	− OU T	Exceeding measurable range	Radius of curvature is less than 5.2mm	
	C OU T	Exceeding measurable range	Corneal astigmatism exceeds 15.73D	

8.4. Keratometry Peripheral Measurement (KER-P Mode)

It is the mode to measure the curvature of part around cornea. Based upon the center of cornea, measure the curvature of part around cornea from the positions of up/down and left/right direction. It is to indicate the relative eccentricity while comparing the curvature of part around cornea with the curvature of corneal center.

NOTE

The eccentricity means how even the part around cornea is compared to the corneal center. Generally, human cornea has the highest curvature and the longer the distance from the corneal center is it gets more even. Consequently, in case of prescribing lens such as RGP with corneal center curvature only, the patient can feel uncomfortable while putting on the lens. It is possible to select the appropriate lens considering the characteristics of patient by using the eccentricity of part around cornea calculated in KER-P mode.

① Check whether or not the measurement screen appear on the screen of monitor.

② Keep pushing MODE button while selecting KER_P mode until “KER-P” is to be indicated on the upper right side of the screen.

③ Measurement of Corneal Center

- The initial measurement position is the corneal center, and it is indicated as CENTER on the right upper side of screen. The curvature measured in the corneal center is the same with the one measured in KER mode.

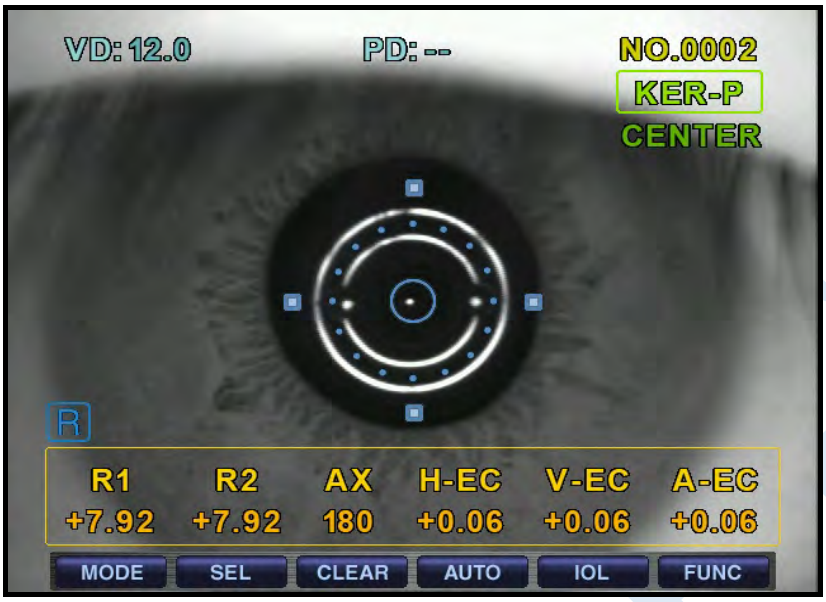

[Figure 25. Screen indicating KER-P mode]

In case of corneal center,

- R1 : Radius of curvature on maximum meridian
- R2 : Radius of curvature on minimum meridian
- AX : Axis on the radius of curvature on maximum meridian
- H-EC : Eccentricity of horizontal direction in the entire eyeball
- V-EC : Eccentricity of perpendicular direction in the entire eyeball
- A-EC : Average eccentricity of the entire eyeball

④ Measurement of part around cornea

The direction of part around cornea which is measure at present is to be indicated

at the bottom of measurement mode indication.
Four(4) boxes are to be indicated in up/down, left/right side of Mire ring. Each box indicates the proceeding state of measurement on part around cornea. If there is the measured result around part of cornea where the box is located, the inside of box is to be full with color: In case of no result, the box is to be indicated as an empty box. The relevant box indicated at the part around cornea which is measured now is to flicker.

Direction of part around cornea

- Superior (SUP) : Upside from corneal center
- Inferior (INF) : Downside from corneal center
- Temple (TEM) : To the temple of examinee from corneal center
- Nasal (NAS) : To the nose of examinee from corneal center

⑤ Sequence to measure the part around cornea

Measure it following the sequence of TEM -> SUP -> NAS -> INF
In case that the measurement in the direction of part around cornea becomes difficult, the direction lamp (guidance LED light) is to radiate in order to draw the examinee's sight around Mire ring actually. After the examiner shall ask the examinee to look at the light of direction lamp, then he or she can perform the measurement by adjusting the focus of Mire ring.

In case of part around cornea (SUP, INF, TEM, NAS),

- R1 : Radius of curvature on maximum meridian in periphery
- R2 : Radius of curvature on minimum meridian in periphery
- AX : Axis on the radius of curvature on maximum meridian in periphery
- RM : Average curvature in periphery
- EQ :Difference between diopter and corneal center
- E : Eccentricity of periphery

You can change the present measurement position by pushing SEL button in KER-P mode. If the measurement fails at the specific position, in case that re-measurement is needed, or as checking the measured result, you can change the present measurement position by consecutively pushing SEL button.

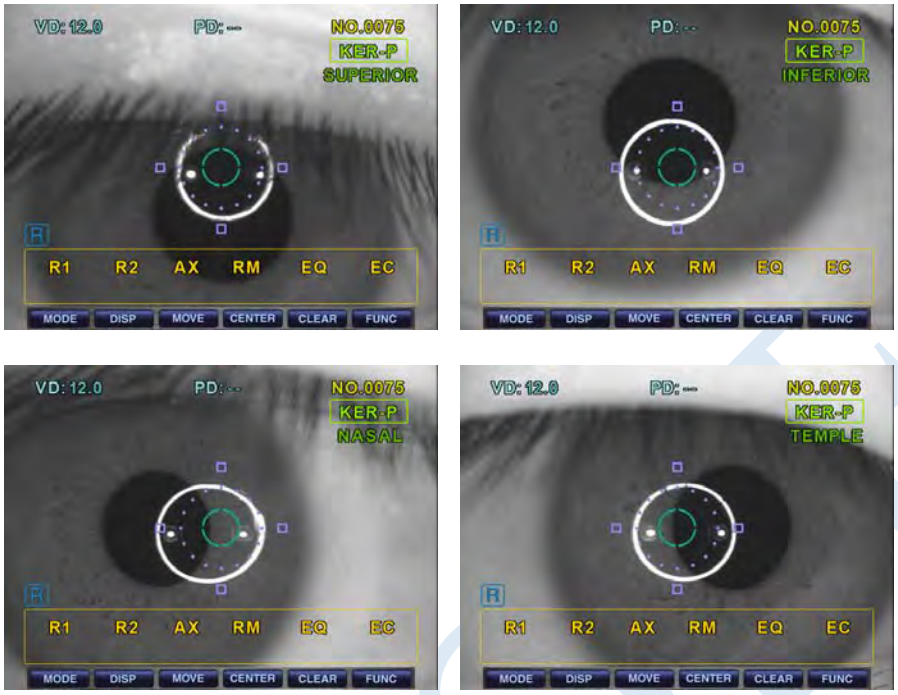

[Figure 26. Screen indicating KER-P Mode]

8.5. Measurement of Contact Lens Base Curve(CLBC Mode)

It is the mode to measure base curve of contact lens (concave surface).

1. Check whether or not the measurement screen appears on the screen of monitor.
2. Keep pushing MODE button while selecting CLBC mode until “CLBC” is to be indicated on the right upper side of screen.
3. Adhesion of Contact Lens
   - Put the surface of contact lens to be measured to the upward direction.
   - Contact lens is to be adhered by the surface tension.
   - Be careful lest contact lens should be adhered tilting. Also, make sure that air bubbles should not be generated behind contact lens.

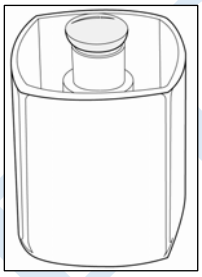

[Figure 27. Adhesion of Contact Lens]

4. Sticking of Model Eye
   - Fix the model eye stuck with contact lens with pushing pin after taking the chin-rest paper away. Let contact lens directed to the measurement window.

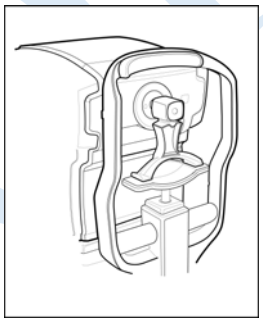

[Figure 28. Adhesion of Model Eye]

5. Adjustment of Position and Focus
   - Let Mire image come into the center of external array ring by slowly pushing and rotating the operation lever.
   - Adjust the focus so that the outline of Mire image can be seen most apparent. As the focus is adjusted, the circle symbol appears on the bright dot.
6. Measurement
   - Push the measurement button.
   - As you keep pushing the measurement button, the measurement is to be

performed consecutively.

- As the measurement is completed, the measured result is to be indicated on the screen of monitor.

NOTE
The measure result of astigmatic axis in base curve(concave surface) of contact lens has the difference of 90° compared with the measured value of astigmatic axis in the corneal curvature(convex surface).

[Figure 29. Screen indicating CLBC Mode]

7. Print

- Press Print button.

8.6. Intraocular Lens (IOL) Measurement Mode (IOL Mode)

The cases that light is reflected from the surface of IOL, that the crystalline lens is in opacity just like a cataract patient , or that the radius of pupil is very small can cause the error in the measured value of refractive power. In these cases, measure it by pushing IOL button.
In case of severe cataract, measure or observe it in Retro-Illum mode (refer to section 8.7).

1. Selection of REF Mode or K&R Mode
   - Keep pushing MODE button until “REF“ or ”K&R” is to be indicated on the right upper side of screen.
2. Perform the adjustment of array and focus according to procedure 1, 2 of section 8.1.1.
3. Selection of IOL Mode
   - Push IOL button (indicated as “REF-I” , “K&R-I”).
4. Measurement
   - Push the measurement button.
   - As you keep pushing the measurement button, the measurement is to be performed consecutively.

NOTE
Decenteredness and distortedness of eye implanted with IOL, or being right after surgery can cause the error to the measured values as there is a case of deformation of iris.

8.7. Retro-ILLUM Measurement Mode (Retro-ILLUM Mode)

Retro-Illum measurement mode is the measuring function to use usefully in the following cases.

1. It is to examine the crystalline lens of patient who has the severe symptom of cataract or undergoes it, or to measure its refractive power.
   - Examine the degree of opacity of crystalline lens with the shape of light reflected from retina while changing intensity of light shed on the eye.
   - In case that the crystalline lens is not much in opacity, it is possible to measure the sight refractive power of eye as well while observing the shape reflected from retina.
2. In case there are scratches on retina, observe the scratches: or observe whether or not the penetration of light into IOL is uniform after the implantation surgery of IOL.

8.7.1. Adjustment of Array and Focus

① Perform the adjustment of array and focus according to procedure 1, 2 of section 8.1.1.

② As pushing ILLUM button after pushing FUNC button while selecting Ret-Illum mode, the [Observe] screen below is to appear.

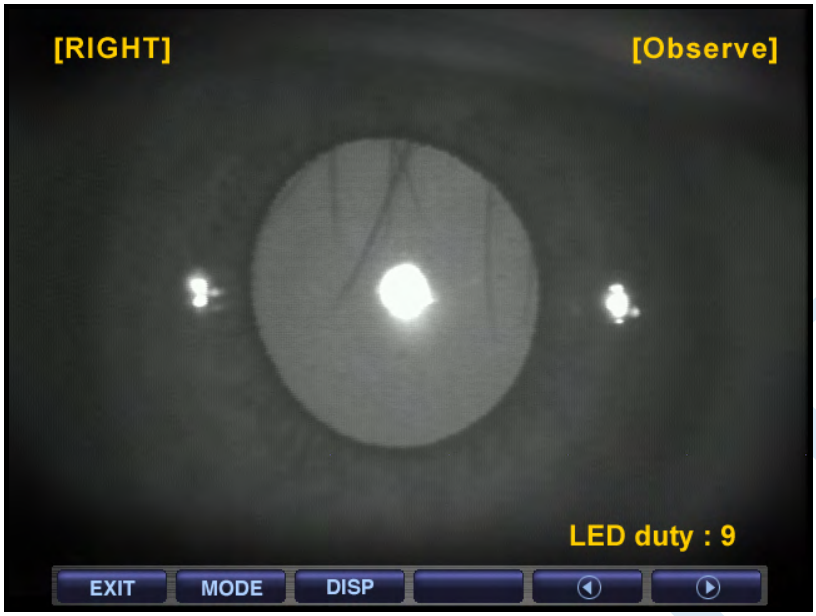

[Figure 30. Retro-illumination Observation Window]

■ [Observe]

- As Ret-ILLUM mode is to be selected by pushing ILLUM measurement button, [Observe] window is to appear on the screen together with Ret-Illum image spread out reflected from retina.
- Diagnose the crystalline lens, opacity degree of cornea, and the degree of corneal scratches by observing the state of this Ret-Illum image.

<User Menu>

MEA : By using the joystick measurement button, you can store the observed Ret. Illum image in memory while changing it as a static window.

MODE : It is the button to change the window between [Observe] and [Measure].

DISP : It is possible to divide the static window of Ret. Illum obtained by measurement button by two (2), and to show it by enlarging it for each

left/right eye. By using ◀ button and ▶ button, select the image. Also, as pushing SEL button, the selected Ret. Illum image is to be enlarged. As pushing Print button amongst the menus of enlarged window, it is possible to output the print of Ret. Illum image. If you push EXIT button, it is to go back to DIS window again.

◀ Button: It is the button to decrease the intensity of Ref LED for one (1) level.

▶ Button: It is the button to increase the intensity of Ref LED for one (1) level.

Measurement Mode Return: As pushing EXIT button, it is to finish Ret. Illum mode, and to return to the ordinary measurement mode.

■ [Measure]

- If you push Mode button in [Observe] window, it is changed to [Measure] window.[Measure] window is to consecutively measure the sight refractive power, astigmatism and astigmatic angle, and to show them together with Ret-Illum image on the screen at the same time.

[Figure 31. Retro-Illum. Measure Window]

<User Menu >

MEA : By using the joystick measurement button, you can store the observed Ret. Illum image and the measured data of sight refractive power in memory while changing it as a static window.

MODE : It is the button to change the window between [Measure] and [Observe].

AUTO : It is possible to divide the static window of Ret. Illum obtained by measurement button by two (2), and to show it by enlarging it for each left/right eye. By using ◀ button and ▶ button, select the image. Also, as pushing SEL button, the selected Ret. Illum image is to be enlarged. As pushing Print button amongst the menus of enlarged window, it is possible to output the print of Ret. Illum image. If you push EXIT button, it is to go back to DIS window again.

◀ Button: It is the button to decrease the intensity of Ref LED for one (1) level.

▶ Button: It is the button to increase the intensity of Ref LED for one (1) level.

Measurement Mode Return: As pushing EXIT button, it is to finish Ret. Illum mode, and to return to the ordinary measurement mode.

8.7.2. Observation on Retro-Illum

① Adjustment of brightness of LED to measure refractive power
- In order to take a close look at Retro-Illumination image, change the intensity of LED to measure refractive power by one (1) level using ◀ button and ▶ button.

② Observation on Retro-Illumination Image
- Let LED to measure the refractive power to be at incidence to eye while avoiding the part of opacity in crystalline lens by using the operation lever. It is effective for observation on Retro-Illumination to let LED light be shed on part around pupil.

NOTE
In order to protect the patient's eyes, avoid examining the eyes over 30 seconds.

③ Stopping Image
- After adjusting the focus of image by using the operation lever, stop the image by pushing the measurement button. If the stopped screen is not satisfactory, stop the image again after returning to the original screen by pushing EXIT button.

④ Measuring Refractive Power and Stopping Image

- As pushing Mode button in [Observe] window, it is to be changed to [Measure] window. At this time, as pushing Mode button again, [Observe] window is to return. Position the bright dot which indicates LED light to shed on the eye so that it can avoid the part of opacity of pupil by using the operation lever, and stop the image and the measured value by pushing the measurement button after well adjusting the focus of image appeared on the screen. If the stopped image is not satisfactory, stop the image again after returning to [Measure] window by pushing EXIT button.

NOTE
The opacity of crystalline lens caused by cataract can lead in errors of measured value while causing the aberration by the decenteredness.

8.7.3. Storage

If you want to store the stopped image in memory, push the measure button. You can store max of two (2) images for each eye. If you want to return to [Observe] or[Measure] window, please push EXIT button.

8.7.4. Examination on the other eye

Perform the examination on the other eye and the storage of its image by the same way.

8.7.5. Call for Stored Image

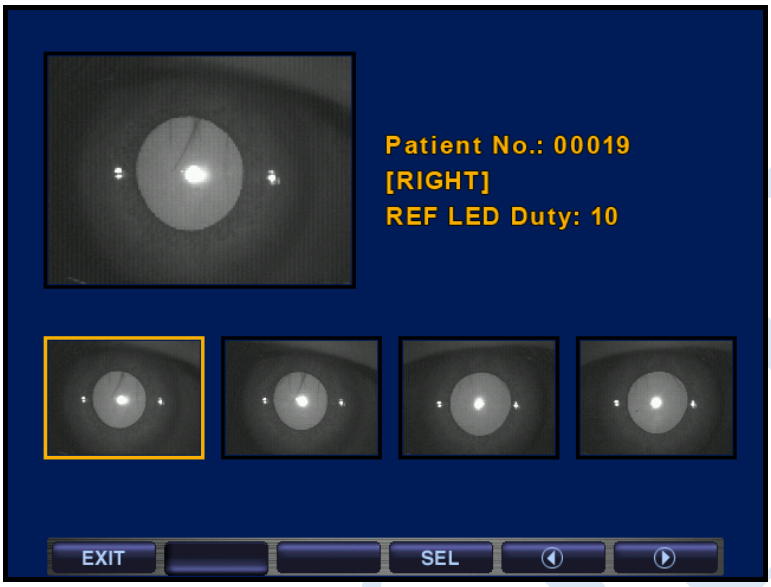

[Figure 32. Window indicating Stored Image]

① In order to call the stored Ret-Illumination image for two eyes on the screen of monitor, enter Display mode by pushing DISP button.

② You can select each image stored in Display mode window by using the button of ◀ or ▶ .

③ As pushing EXIT button, it shall return from the enlarged window to the Display window.

④ As pushing EXIT button in Display window, it is to return to [Measure] window.

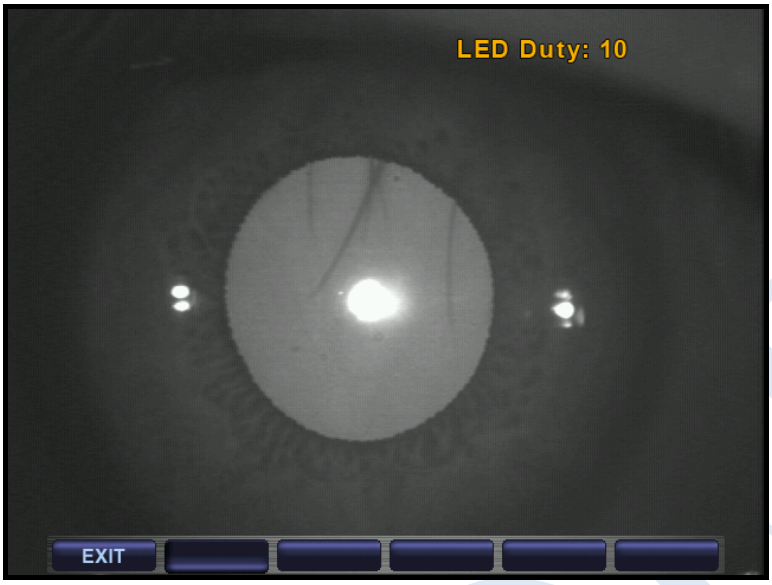

[Figure 33. Window indicating stored image(enlarged)]

8.7.6. Return to measurement mode

As pushing EXIT button in [Observe] or [Measure] window, you can return to [REF], [KER], [K&R], [KER-P] or [CLBC] measurement mode.

9. Other Modes

9.1. Acuity Map Mode (Z-MAP Mode)

Zernike Map indicates the distribution of refractive power in pupil area. Based upon the wavefront of emmetropes, Z-Map is drawn as a kind of topographical map having the elevation according the degree of distortion(aberration) of wavefront come from myopia or hypermetropia. Z-Map is to measure the refractive power in REF or K&R mode, and you can see it by pushing Z-MAP button.

9.1.1. Composition of Window

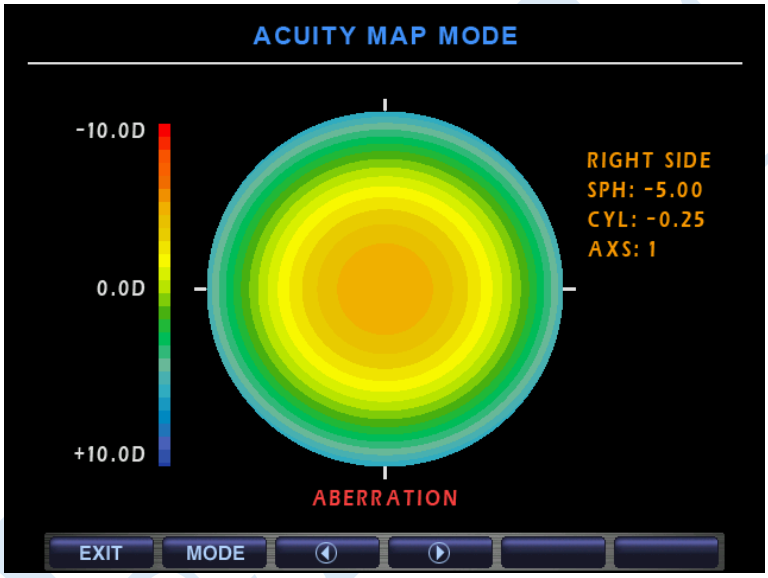

[Figure 34. Z-Map Window(Aberration)]

Map Level on the left side in window is the aberration value of wavefront, and it is the color table to draw map. The max and min value of the aberration of measured wavefront is indicated by the unit of micrometer(um). The wavefront aberration of emmetropes is 0, and the severer the myopia and hypermetropia is, it is to have higher wavefront aberration of (+) and (-) sign respectively.

By using the color table defined in Map Level, the map in the center of window is to be drawn according to the areal wavefron aberration(refractive power) within pupil area. Emmetropes is as in green, hypermetropia is as in blue, and myopia is indicated as in red: the severer the abnormality of eye is, the thicker their colors become. In case including astigmatism, the refractive power topography of oval type is to be drawn to the direction of astigmatic axis.

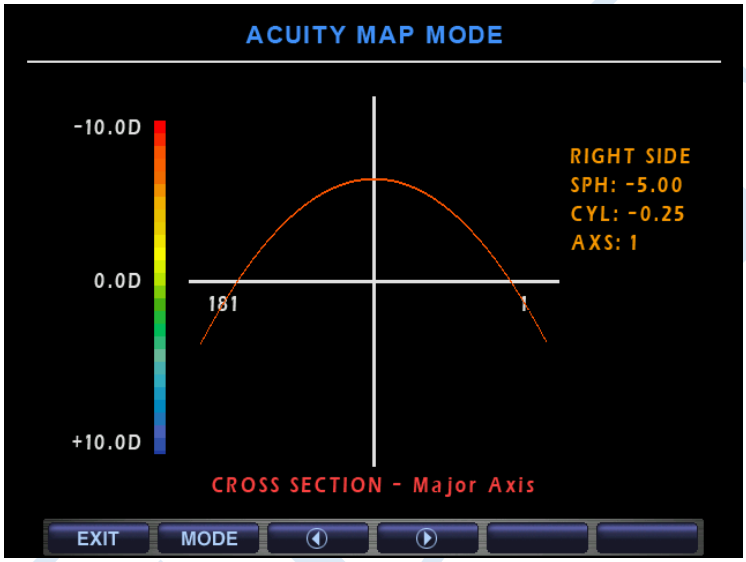

[Figure 35. Z-Map Window(Low Graph)]

As pushing ◀ ▶ button, it is changed to the graph which is to be seen as a sectional diagram as the map is cut horizontally and perpendicularly.

Map information items indicated on right side of window are as follows.

- Side : Right or Left
- Sph : Spherical Aberration
- Cyl : Cylinder Aberration
- Axs : Cylinder Axis
- RMS : Size of Wavefront Aberration (Root Mean Square)
- Max : Max of Wavefront Aberration (um)
- Min : Min of Wavefront Aberration (um)

9.1.2. Change of Window

As changing the measurement position of examinee to left or right side by moving the joystick, the map is to changed again as a result obtained in the measured direction.

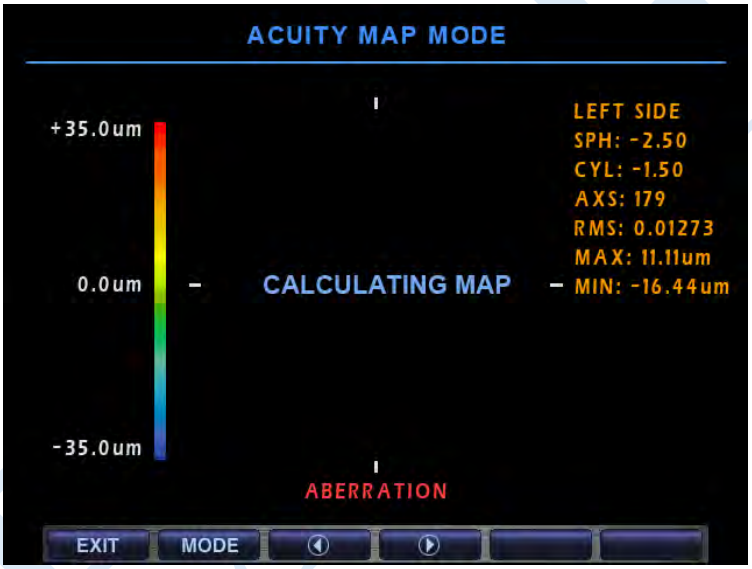

[Figure 36. Z-Map Window Change]

As the map is drawn for the first time, the guide message is to be indicated as “Calculating Map” for some time of standby for calculation.

As changing the MAP item n user SETUP as ON, Zernike Map window is to be indicated directly on right bottom in the measurement window of REF and KNR Mode.

[Figure 37. Z-Map Window]

9.2. Measurement of Corneal Radius(SIZE Mode)

It is the mode to measure the corneal radius.

1. Check the measurement window on the screen of monitor.
2. Adjust the position and focus so that the image of eye to be measured can be seen apparently.
3. Push SIZE button after pushing FUNC button while selecting SIZE measurement mode.

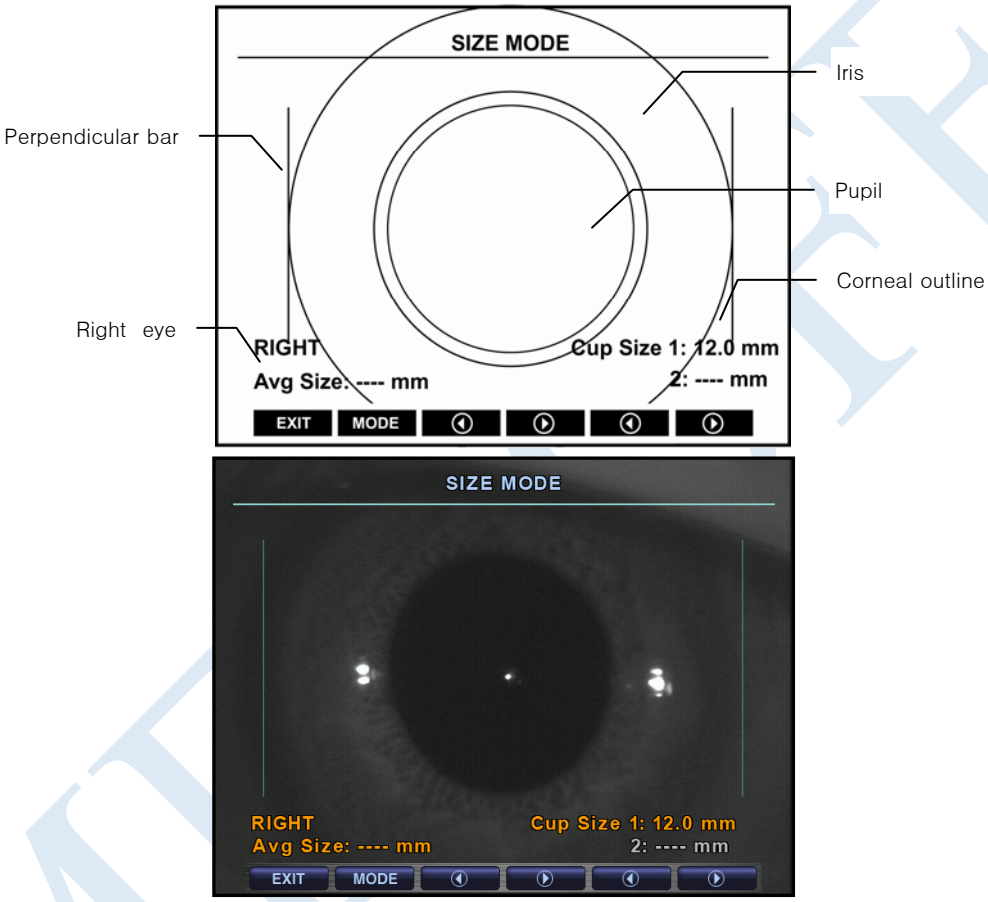

[Figure 38. Window indicating Size Mode]

4. Adjustment of measurement position and focus

- Ask the examinee to look at the internal fixed target.
- Adjust the position so that the pupil shall be in between two(2) perpendicular bars by moving the operation lever.
- Adjust the focus so that the corneal corner can be seen apparently.

NOTE
As adjusting the focus on the iris, it is impossible to measure the radius of pupil exactly.

5. Measurement

- As pushing the measurement button, the window shall be stopped.
- ◀ button and ▶ button in the center is to adjust the movement of left bar, and ▶ button and ◀ button in right side is to adjust the movement of right bar.
- Move the relevant bar to left/right sides by pushing ◀ button or ▶ button.
- The measured value shall be indicated on the screen of monitor.
- Store the measured value by pushing the measurement button.
- The measured value is to be inputted beside “1” of right bottom of the screen. It is to be inputted beside “AVG” of left bottom of the screen as well.
- As pushing MODE button, the stopped window is cancelled, and “2” of left bottom of the screen is to be selected as the bar. Every time pushing MODE button, “1” or ”2” is to be selected alternatively. If there was an error in “1” which is the previous measurement, you can select “1” again.

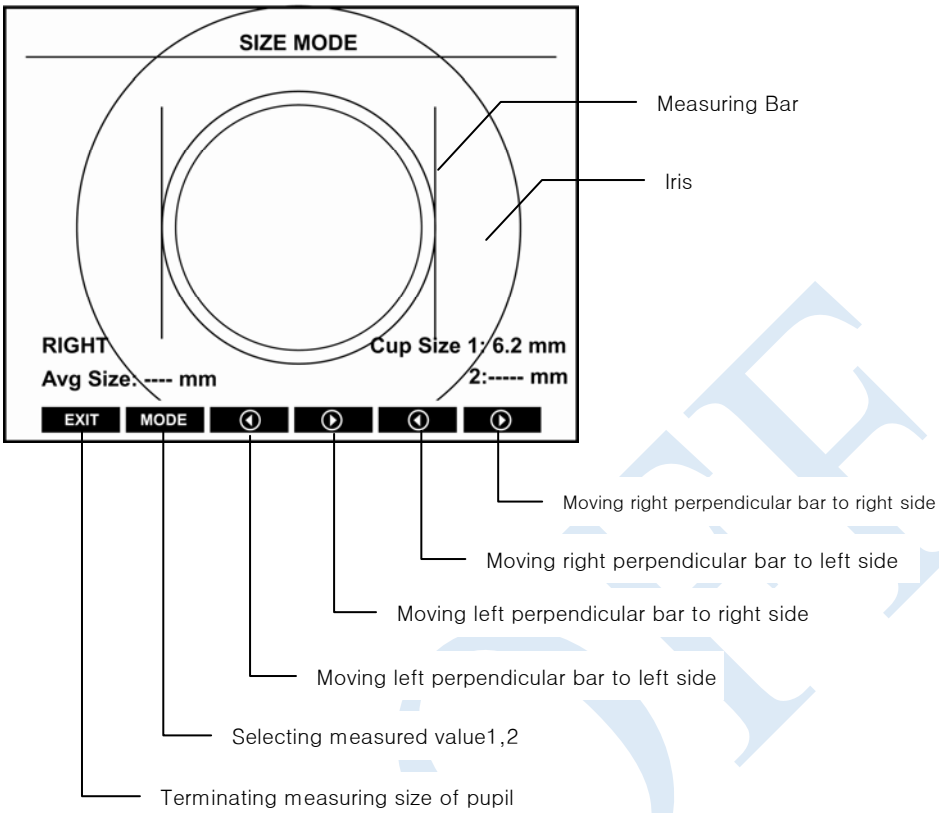

[Figure 39. Window indicating Size Mode Measurement]

6. Repetition of Measurement

- Repeat the measurement in the entry of measured value as many times as you need. Repeat the procedure of 2~4 as performing the measurement again.

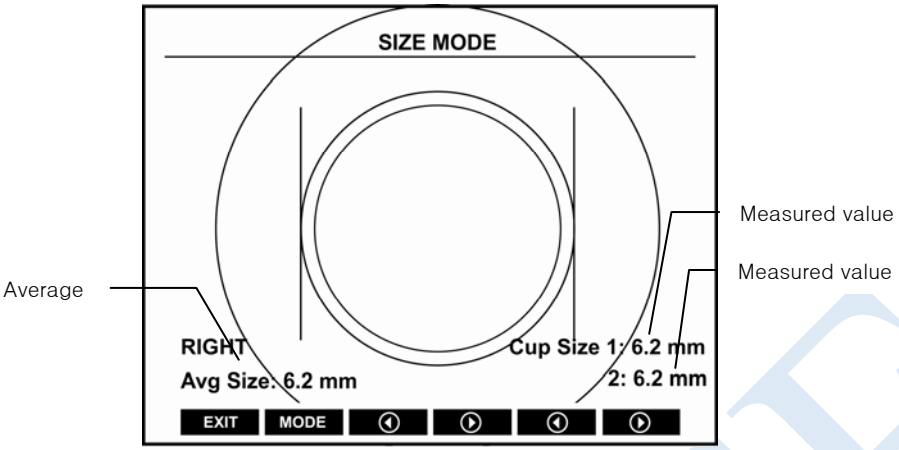

[Figure 40. Window indicating repletion of Size Mode Measurement]

7. Measurement of the other eye
   - Measure the other eye in the same way while holding the operation lever and pushing the stage to the counter direction.

8. Printout of Measured Result
   - The measured result of corneal radius is to be printed out as the item of "[CORNEAL SIZE]" in the built-in printer.

9.3. VIRTUAL COMPARISON Mode

A Virtual comparison Function allows the patient to compare the current view(uncorrected eye view) with the view corrected by AR measurement.
By changing the distance to the chart, the patient can experience the virtual comparison.

1. Perform AR measurement.
2. Press the COMP button
3. Press the COMP button again(uncorrected eye or LM Data)
   - SE value of LENS : LENS METER data or uncorrected eye
   - SE value of REF : corrected eye by AR measurement(The value of AR measurement can be set by +INC/-DEC buttons)
4. Pressing the COMP button switches between the corrected view and the uncorrected view.
5. If necessary, switch to the view for near vision
   - Press the near button(40cm)
   - f necessary, switch to the view with addition power
   - Pressing the ADD button(+1.75D)
   - Pressing the ADD button again cancels the addition power
6. Press the Exit button to finish the virtual comparison function and return to the measurement screen.
7. Measure the other eye in the same manner.

When finishing the measurement, print the data out.

.

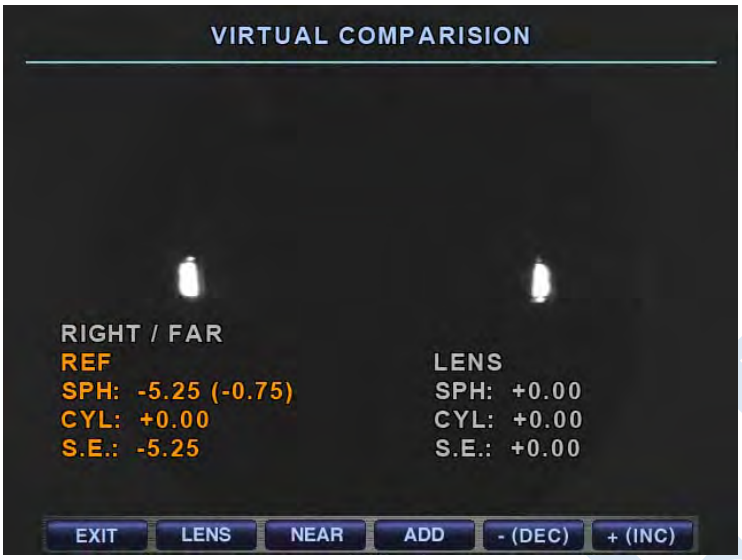

[Figure 41. Display of VIRTUAL COMPARISON Mode]

9.4. DISPLAY Mode

You can see the measured results(Max ten(10) units of data) stored in memory in this mode. As pushing DISPLAY mode in the measurement mode, it changes to DISPLAY Mode. It returns to the measurement mode as pushing EXIT button again.

NOTE

- In case of K/R mode, the page changes as pushing REF button or KER button.
- As pushing print button, the measured result stored in memory is to be printed out through the built-in printer, and it is removed completely for the new measurement.

1. Measured Result of Refractometry

① It indicates the latest measured result of max amount of ten(10) times(refractive power of left/right eyes). As pushing CLEAR button, the stored data is to be removed.

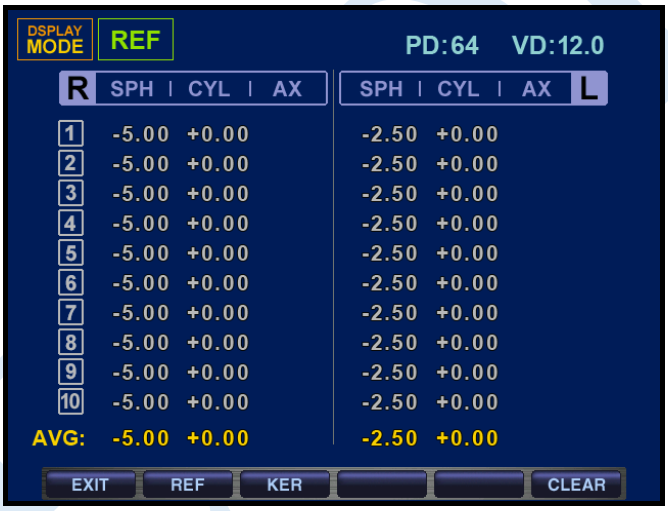

[Figure 42. Measured Result of Refractory]

2. Measured Result of Keratometry

② It indicates the latest measured result of max amount of ten(10) times(refractive power of left/right eyes). As pushing CLEAR button, the stored data is to be removed.

[Figure 43. Measured Result of Keratometry]

9.5. User SETUP Mode

It is to perform many setups relating to measurement, print-out, etc. As pushing MODE button for seconds(2~3 seconds), it enters SETUP mode.

1. Measurement of Refraction/Cornea

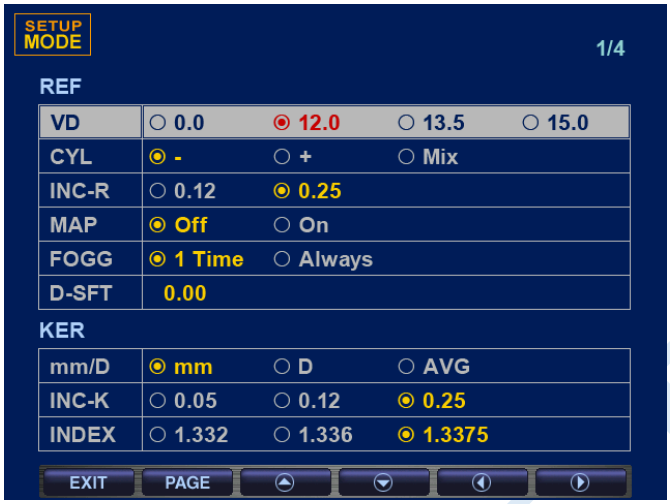

[Figure 44. Setup Mode Information (page 1)]

[How to change page]

As pushing PAGE button, it is to enter the next page.

[How to change item]

Select the wanted item while pushing ▲ button or ▼ button.

[How to change content]

As pushing ◀ button or ▶ button, the content changes. The selected content is to be indicated as yellow character length.

NOTE
You should change some contents in other way. The procedure of relating setup change is to be ordered under the explanation on each item.

[How to enter the measurement mode]

As pushing EXIT button, window as below is to pup up.
Cancel : As intending to return to Setup mode again.
Save & Exit : As intending to store the content and to return to the measurement mode
Exit without saving : As intending to return to the measurement mode without storing
After pushing ▲ button or ▼ button toward the wanted item and selecting it, push SEL button.

[Content of Item] : 1/4 Page

VD Corneal Vertex Distance

CYL Astigmatism Indication Type

INC-R Indication Unit of SPH and CYL

MAP Z-Map window to pop up in measurement window of REF Mode

mm/D Indication Type of Corneal Measurement

mm	R1 ·····	Radius of curvature on maximum meridian
	R2 ·····	Radius of curvature on minimum meridian
	AX ·····	Axis on the radius of curvature on maximum meridian
D	K1 ·····	Refractive power on minimum meridian
	K2 ·····	Refractive power on maximum meridian
	AX ·····	Axis on minimum meridian
AVG	AR ·····	Average radius of curvature
	CY ·····	Corneal astigmatism
	AX ·····	Axis of Corneal astigmatism

INC-K Increment of corneal power and astigmatism

INDEX Corneal equivalent refractive index

2. Serial number, Date & Time, Type of Output

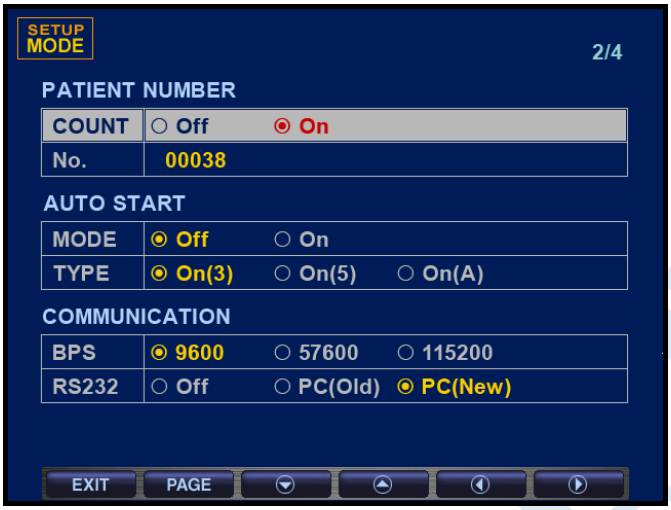

[Figure 45. Setup Mode Information (page 2)]

[Content of Item] : 2/4 Page

[COUNT] Selection whether or not to use serial number

[NO.] Setup of Serial Number : As pushing ◀ button or ▶ button, the serial number is to change by the unit of '1' each time.

AUTO START You can select "ON" or "OFF" of AUTO START MODE.

[MODE] Select "ON" or "OFF" mode while pushing ◀ button or ▶ button.

[TYPE] It is to measure in AUTO START Mode consecutively three(3) times only. It is to measure in AUTO START Mode consecutively five(3) times only. It is to measure in AUTO START Mode consecutively.

COMMUNICATION Setup for communication to other machines

[BPS] Select the one among 9600, 57600, and 112500bps as its data transfer rate.

[RS232] Setup of transmission method(method and version of other equipment)

[Figure 46. Setup Mode Information (page 3)]

[Content of Item] : 3/4 Page

DATE & TIME Date & Time

[DISP] Setup of indication sequence of year/month/date

YMD : Year/Month/Date

MDY : Month/Date/Year

DMY : Date/Month/Year

[SET] After selecting item by pushing ◀ button or ▶ button, you can change the value by using ▲ button or ▼ button.

PRINT Print Setup

[A-PRT] In case of measuring in AUTO START Mode, it is to print out the measured result automatically as the each measurement to left/right eyes is completed one after the other.

[R-PRT] Refractometry -Output type of built-in printer for the measured result of Refractometry

STD : The measured result & average value of max ten(10) times are to be printed out

AVE : Only average value is to be outputted printed out

OFF : It is not to be printed out

[K-PRT] Output type of built-in printer for the measured result of Keratometry

STD : The measured result & average value of max ten(10) times are to be printed out

AVE : Only average value is to be printed out

OFF : It is not to be printed out

[EYE] ON : Pictures of eye & refraction according to the measured result of Refractometry is to be outputted.

OFF : It is not to be printed.

[Figure 47. Setup Mode Information (page 4)]

[Content of Item] : 4/4 Page

PRINTER MESSAGE Input the measured data and message to be outputted through printer by using the function of internal printer message input. It can print 26 units of characters on two(2) lines.

[MSG1] Character input for the first line

[MSG1] Character input for the second line

- Character Input

As pushing ◀ button or ▶ button, the character board is to pop up. After selecting the line by ▲ button or ▼ button again, input them by using SEL button while selecting characters pushing ◀ ▶

button or button.

VIRTUAL COMPARISON

[NEAR] The near working distance of the chart can be set.

[ADD] The addition power can be set.

[Figure 48. Character Input]

ETC Other Setup

[LANG] You can select the characters indicated on the screen among the supported multi languages. Select one among English, Chinese, Spanish, German and French.

[BEEP] Setup of Beep sound

.

9.6. Power saving Function

The power saving function begins to operate if you do not operate the machine at all for five(5) minutes or so. It is to return to the measurement mode as pushing any button optionally in saving mode.

10. Self diagnosis & Maintenance

10.1. Before calling for serviceman

In case that abnormality happens or the machine operates abnormally, a warning sign is to be indicated. In this case, perform the settlements below.
If the machine does not return to the normal condition in spite of the measures below, contact to the agent where you bought the machine after switching the power off.

① As the power switch is on

Message	Cause	Method of settlement
Motor Error	Internal abnormality for the equipment	Re-input the power in 10 seconds after switching it off. In case that the message is indicated again, contact our sales representative.
EEPROM Error		
EEPROM Data Error		
System Error		
Clock Error		
INVALID SETUP DATA — REF	Abnormality in the internal data for Refractometry	Please contact our sales representative.
INVALID SETUP DATA - KER	Abnormality in the internal data for Keratometry	Please contact the selling agent.

② Messages during measurement

Message	Cause	Method of Settlement
TRY AGAIN	Refer to page 15	Refer to page 15
	Objective glass in the measurement window is polluted	Clean the glass
+ OUT	Sphere of examinee's eye exceeds +22D	Impossible to measure
	Curvature radius of examinee's eye exceeds 10.2mm	
	Object lens within measurement window is polluted	Clean the glass
- OUT	Sphere of examinee's eye exceeds -22D	Impossible to measure
	Curvature radius of examinee's eye is less than 5.0mm	
	Objective glass in measurement window is polluted	Clean the glass
C OUT	Astigmatism of examinee's eye exceeds 10D	Impossible to Measure
	Corneal astigmatism of examinee's eye exceed 15D	
	Object lens within measurement window is polluted	Clean the glass

③ Message as printing

Message	Cause	Method of settlement
CHECK PAPER	-There is no printer paper or lever is not closed.	Install printer paper or close the lever.

10.2. Replacement

10.2.1. Printer paper

As red line appears on the paper, immediately change the print paper with new one.

① Open the printer cover.

② Cut the paper inserted in the printer, and take it away from it. Take paper roll together with shaft out of the printer, and pull the rotating shaft away from paper roll.

③ Put the rotating shaft into the new roll.

④ Put the paper inserted with the rotating shaft into the printer case.

⑤ Fix the paper onto the printer. At this time, adjust the length of paper so that it can come out from the paper outlet of the printer cover.

⑥ Close the cover after inserting the end of paper into the hole of cover.

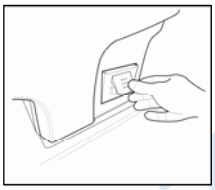

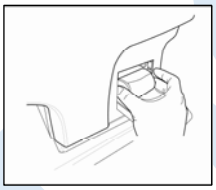

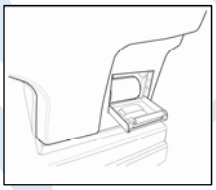

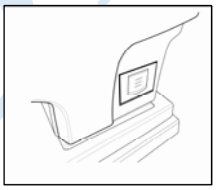

[Figure 49. Opening cover]

[Figure 50. Changing paper]

[Figure 51 Fixing pape

10.2.2. Chin rest paper

① Pull two(2) pins out of the chin-rest.
② Push the pins into the holes of chin-rest paper. You can put 50 sheets of it on.
③ Insert the pins into each one of two(2) holes in the chin-rest.

10.2.3. Replacing Fuse

① Turn off and raise the HRK-7000A with two arm carefully.
② Remove the Power cord
③ Pick the fuse holder out from the Power inlet
④ Exchange the fuses
⑤ Insert the fuse folder

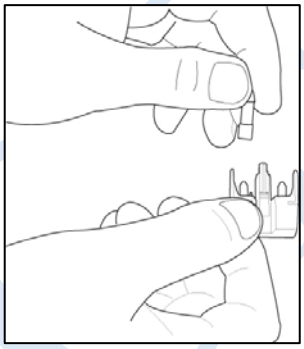

INFORMATION

Use 250V, T3.15AL fuse for the Auto Ref/Keratometer HRK-7000A.

10.3. Cleaning Equipment

① The equipment should be kept as clean basically. Do not use the solvents such as strongly volatile substance, thinner, benzene, etc.
② Put some soapy water to the soft cloth, and twist the water out of the cloth. Then, polish each part of the equipment.
③ As polishing the parts of lens or glass, get rid of dusts on the surface of lens with wind-blower and use a dry cloth.

10.4. As changing the installation place of the equipment

① Off the power switch of main body.

② Take the power connection cable apart.

③ Lock the clamping bolt by rotating it clockwise.

④ Move it while maintaining the horizontality of it by holding the bottom of the main body.

10.5. Disposal

NOTE
To dispose the instrument, accessories, and components, follow local governing ordinances and recycling plans regarding disposal or recycling of instrument or device components. Especially a lithium battery may pollute the environment if the instrument or a lithium battery is abandoned. When disposing packing materials, sort them by the materials and follow local governing ordinances and recycling plans.

11. Service Information

Repair: If the problem is not solved in spite of the settlement according to the contents of chapter 10, please contact to Huvitz's agent with the information on the following items.

④ Name of Equipment Type : HRK-7000A

⑤ Typical No. of Equipment : Typical number consisted of 8 digits and characters written on its name plate

⑥ Explanation on its symptom : Description in details

Supply of parts required for repair:

⑦ The preservation period of parts required for repair of this machine is by eight (8) years after stopping to produce the product.

Parts to be repaired by qualified service manpower :

⑧ Parts below are consumable in their characteristics, or the quality of them shall de degraded after the long time use. User should not replace them by him or herself. Please contact to Huvitz's agent for the replacement if these parts are consumed enough or degraded by the long time use.

⑨ Back-up battery for clerk and data

⚠ CAUTION

As this machine use lithium battery, the reckless abandon of the machine itself or the lithium battery can cause the environmental pollution. Please contact to the professional waste disposal company.

12. Main Specifications

Measurement Mode	
Continuous Keratometry & Refractometry (K/R Mode)	
Refractometry (REF Mode), Keratometry (KER Mode)	
Keratometry Peripheral (KER-P Mode)	
Base Curve of Contact Lens(CLBC Mode)	
Refractometry	
Vertex Distance(VD)	0.0, 12, 13.5, 15.0
SPH	-25.00 ~ +22.00D (In case of VD=12mm)
CYL	0.00 ~ ±10.00D (0.12/0.25D Unit)
Axis(AX)	1 ~ 180° (1° Unit)
Cylinder Form	-, +, MIX
Pupil Distance(PD)	10 ~ 85mm
Minimum pupil diameter	Ø2.0mm
Keratometry	
Radius of Curvature	5.0 ~ 10.2mm (0.01mm Unit)
Corneal Power	33.00 ~ 67.50D (In case that the corneal equivalent refractive power is 1.3375, 0.05/0.12/0.25D Unit)
Corneal Astigmatism	0.0 ~ -15.00D (Increments: 0.05/0.12/0.25D)
Axis	1 ~ 180° (1° Unit)
Corneal diameter	2.0 ~ 14.0mm (0.1mm Unit)

Working range of auto-tracking	
Up & Down	± 15 mm
Right & Left	± 5 mm±2mm
Back & Forth	± 5 mm±2mm
Working range of auto-shooting	
Up & Down	± 0.13 mm or less
Right & Left	± 0.13 mm or less
Back & Forth	± 0.5 mm or less
Movable range of horizontal direction(by joystick)	
Up & Down	30 mm or more
Right & Left	92 mm or more
Back & Forth	38 mm or more

Data Storage	
Measured value of ten(10) times amount for each left/right eye	
Hardware specification	
Built-in printer	Line printer of heat printing type
Power saving function	As stopping to measure for about 5 minutes, the main power is shut. It returns as pushing buttons.
Monitor	TFT LCD Color Monitor of 6.5”
Electrical Power	AC100 ~ 240V, 50/60Hz
Current	1A

13. Accessories

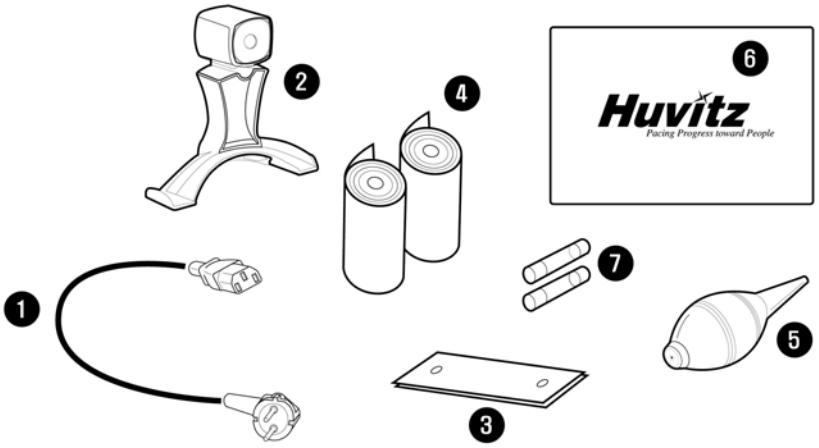

[Figure 53. Accessories]

1. Power Cable(AC 220V / 60Hz Power plug or other)·····1 unit
2. Model Eye (Sph –5.0D~-5.5D)·····1 unit
3. Chin Rest Paper(100 sheets)····· 1 bundle
4. Printer Paper·····2 rolls
5. Wind-blower·····1 unit
6. Dust Cloth·····1 piece
7. Fuse(250V / 3.15A)·····2 units

14. Service Information

If the instrument appears malfunctioning, before calling a customer service, it is highly recommended to check the instrument according to the troubleshooting procedure in section 11 of this manual.

If any problem persists or the instrument is damaged or malfunctioning, contact Huvtiz or local distributor for service with the following information:

- Name of the instrument: Auto Ref/Keratometer MRK-3100P
- Serial number of the instrument: refer to the 9-digit number on its product label or name plate
- Descriptions of Problem: In detail

Date of Purchase: _____

Dealer's Name: _____

Dealer Address: _____

Dealer Phone No.: _____

Model No.: _____

Serial No.: _____

(※ Huvitz recommends customers to fill up the following form after purchase and retain this manual as a permanent record of purchase.)

Write us at:

HUVITZ Co., Ltd.

Huvitz B/D, 689-3 Geumjeong-dong

Gunpo-si Gyeonggi-do, South Korea

435-862

Tel: +82-31-442-8868

Fax: +82-31-442-8619

URL:http://www.huvitz.com

e-mail: mrk-support@huvitz.com